Contactors Overload Relays & Accessories

SHAMROCK CONTROLS

RoHS Compliant

RevA-2/2013

3 & 4 Pole Contactors with AC operating coil

Characteristics

General Characteristics

Type		Unit	TC1-D09 – TC1-D95
Rated insulation voltage (Ui)	IEC 60947-4-1	V	1000
Conforming to standards			NFCEN 60947, VDE0660, BSEN60947, IEC 60947 & IS 13947
Approvals			UL, CSA
Degree of Protection	Conforming to VDE 0106		Protection against direct finger contacts
Protective treatment	Standard version		"TH"
Ambient air temperature	Storage	°C	-60 to +80
(around the device)	Operation	°C	-5 to +55 (0.8 to 1.1Uc)
	Permissible	°C	-40 to +70, for operation at Uc
Maximum operating altitude	Without derating	Mtr.	3000
Operating Position	Without derating		+30° possible, in relation to normal vertical mounting plane

Pole Characteristics

Type TC1-			Unit	D09	D12	D18	D22	D25	D32	D38	D40	D50	D65	D80	D95
Number of poles (Power)				3 or 4	3 or 4	3	3	3 or 4	3	3	3 or 4	3 or 4	3 or 4	3 or 4	3 or 4
Power + Auxiliary				3+1	3+1	3+1	3+1	3+1	3+1	3+1	3+2	3+2	3+2	3+2	3+2
Rated current (Ie)	AC3 up to 440V @ 55°C		A	9	12	18	22	25	32	38	40	50	65	80	95
Rated operating Voltage	Up to		V	690	690	690	690	690	690	690	690	690	690	690	690
Frequency limits	Of the operational current		Hz						25-400						
Rated thermal current (Ith)	θ < 40°C		A	25	25	32	32	45	50	50	60	80	80	125	125
Rated making capacity	Irms conforming to IEC-60947-4		A	250	250	300	300	450	550	550	800	900	1000	1100	1200
Rated breaking capacity	Irms conforming to 220-440V		A	250	250	300	300	450	550	550	800	900	1000	1100	1100
	IEC-60947-4	500V	A	175	175	250	250	400	450	450	800	900	1000	1000	1100
		660-690V	A	85	85	120	120	180	180	180	400	500	630	640	640
Average impedence per pole	At Ith and 50Hz	Milli Ω	Max.	2.5	2.5	2.5	2.5	2	2	2	1.5	1.5	1	0.8	0.8
Power dissipation per pole for the above operational currents		AC-3	W	0.2	0.36	0.8	0.8	1.25	2	2	2.4	3.7	4.2	5.1	7.2

Control Circuit Characteristics

Type				Unit	TC1-D09–D22	TC1-D25–D38	TC1-D40–D65	TC1-D80–D95
Rated control circuit voltage (Uc)		50 or 60 Hz		V	12 to 660			
Control voltage limits (θ < 55°C)	50 or 60Hz Coil	Operational			0.8 - 1.1 Uc			
		Drop out			0.3 - 0.6 Uc			
Average consumption at 20°C and at Uc	50/60Hz Coil	Operational			0.85 - 1.1 Uc at 60Hz			
	AC 50 Hz	Inrush	50 Hz Coil	VA	60	90	200	200
			50/60 Hz Coil	VA	70	100	245	245
			COS φ		0.75	0.75	0.75	0.75
		Sealed	50 Hz Coil	VA	7	7.5	20	20
			50/60 Hz Coil	VA	8	8.5	26	26
			COS φ		0.3	0.3	0.3	0.3
	AC 60 Hz	Inrush	60 Hz Coil	VA	70	100	220	220
			50/60 Hz Coil	VA	70	100	245	245
			COS φ		0.75	0.75	0.75	0.75
		Sealed	60 Hz Coil	VA	7.5	8.5	22	22
			50/60 Hz Coil	VA	8	8.5	26	26
			COS φ		0.3	0.3	0.3	0.3
Average operating time at Uc		Closing time "C"		msec	12-22	15-24	20-26	20-35
		Opening time "O"		msec	04-12	05-19	8-12	6-20
Mechanical life Uc (mechanical durability) in millions of operating cycles		50 or 60 Hz Coil			20(16 for TC1D18)	16	16	10
		50/60 Hz Coil or 50 Hz			15	12	6	4
Maximum operating rate		In operating cycle/hour			3600	3600	3600	3600

Integral Auxiliary Contact Characteristics

Type		Unit	TC1- D09 – TC1- D95
Rated thermal current (Ith)	θ < 55°C	A	10
Rated operational voltage (Ue)	Upto	V	660

3 & 4 Pole Contactors with DC operating coil

Characteristics

General Characteristics

Type		Unit	TP1-D09 - TP1-D80
Rated insulation voltage (Ui)	IEC 60947-4-1	V	1000
Conforming to standards			NFC EN 60947, VDE0660, BS EN60947, IEC 60947 & IS 13947
Approvals			UL, CSA
Degree of Protection	Conforming to VDE 0106		Protection against direct finger contacts
Protective treatment	Standard version		"TH"
Ambient air temperature	Storage	°C	-60 to +80
(around the device)	Operation	°C	-5 to +55 (0.8 to 1.1Uc)
	Permissible	°C	-40 to +70, for operation at Uc
Maximum operating altitude	Without derating	Mtr.	3000
Operating Position	Without derating		+30° possible, in relation to normal vertical mounting plane

Pole Characteristics

Type TP1-			Unit	D09	D12	D18	D22	D25	D32	D38	D40	D50	D65	D80
Number of poles (Power)				3 or 4	3 or 4	3	3	3 or 4	3	3	3 or 4	3 or 4	3 or 4	3 or 4
Power + Auxiliary				3+1	3+1	3+1	3+1	3+1	3+1	3-1	3+2	3-2	3-2	3-2
Rated current (Ie)	AC3 up to 440V @ 55°C		A	9	12	18	22	25	32	38	40	50	65	80
Rated operating Voltage (Ue)	Upto		V	690	690	690	690	690	690	690	690	690	690	690
Frequency limits	Of the operational current		Hz						25-400					
Rated thermal current (Ith)	θ < 40°C		A	25	25	32	32	45	50	50	60	80	80	125
Rated making capacity	Irms conforming to IEC-60947-4		A	250	250	300	300	450	550	550	800	900	1000	1100
Rated breaking capacity	Irms conforming to	220-440V	A	250	250	300	300	450	550	550	800	900	1000	1100
	IEC-60947-4	500V	A	175	175	250	250	400	450	450	800	900	1000	1000
		660-690V	A	85	85	120	120	180	180	180	400	500	630	640
Average impedence per pole	At 1In and 50Hz Milli Ω		Max.	2.5	2.5	2.5	2.5	2	2	2	1.5	1.5	1	0.8
Power dissipation per pole for the above operational currents	AC-3		W	0.2	0.36	0.8	0.8	1.25	2	2	2.4	3.7	4.2	5.1

Control Circuit Characteristics

Type			Unit	TP1-D09-D22	TP1-D25-D38	TP1-D40-D65	TP1-D80
Rated control circuit voltage (Uc)	DC		V	12 to 660		12 to 660	
Control voltage limits (θ < 55°C)	Operational	Standard Coil		0.8 - 1.1 Uc		0.85 - 1.1 Uc	
		Wide Range Coil		0.7 - 1.25 Uc		0.75 - 1.25 Uc	
Average consumption DC at 20°C and at Uc	Drop out			0.1 - 0.25 Uc		0.1 - 0.3 Uc	
	DC	Inrush	W	9	11	22	22
		Sealed	W	9	11	22	22
Average operating time at Uc	Closing time "C"		msec	40-48	52-64	85-110	95-130
	Opening time "O"		msec	6-14	8-14	20-35	20-35
Mechanical life Uc (mechanical durability)	In millions of operating cycles			30	25	20	20
Maximum operating rate (at ambient temp. of θ < 55°C)	In operating cycle/hour			3600	3600	3600	3600

Integral Auxiliary Contact Characteristics

Type		Unit	TP1- D09 - TP1- D80
Rated thermal current (Ith)	θ < 40°C	A	10
Rated operational voltage (Ue)	Upto	V	660

Contactors' Selection Guide

(according to the required electrical life)

Use in Category AC-1 (Ue < 440V). Control of resistive circuits (cos ϕ > 0.95). The current broken (I_c) in category AC-1 is equal to the current (Ie) normally drawn by the load.

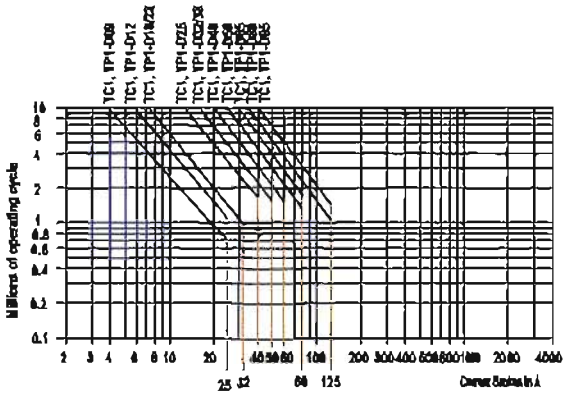

Use in Category AC-3 (Ue < 440V). Control of 3-phase asynchronous squirrel cage motors with breaking whilst motor running. The current broken (I_c) in category AC-3 is equal to the current (I_e) normally drawn by the load.

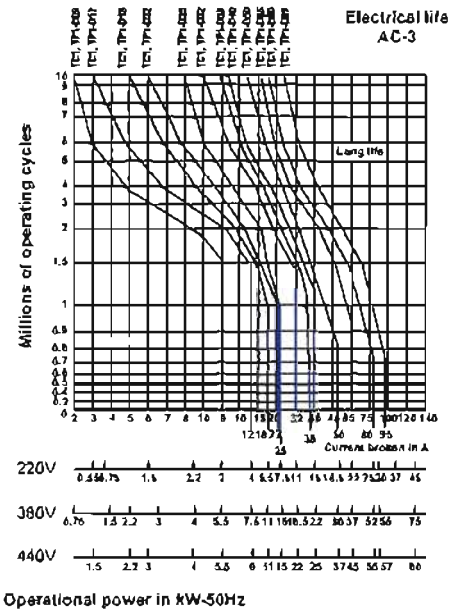

Use in Categories AC-2, AC-4 (Ue < 440V). Control of 3-phase asynchronous squirrel cage (AC-4) or slip ring (AC-2) motors with breaking whilst motor stalled. The current broken in category AC-4 is equal to 6xI_e. (I_e=rated operational current of the motor).

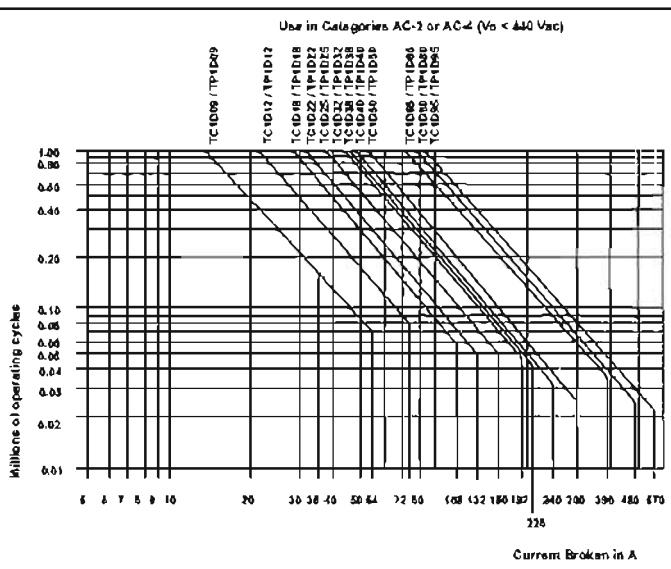

3 & 4 Pole Contactors with AC operating coil

Specifications

TC1-D65••-XX

3 Pole Contactor with AC operating coil

Maximum Current		Maximum HP						Aux. Contacts Built-In per contactor		Catalog Number
Inductive	Continuous	Single Phase		Three Phase						
AC-3 A	AC-1 A	120V	230V	200V	230V	480V	600V	NO	NC	
9	20	0.5	1	2	2	5	7.5	1	0	TC1-D0910-XX
								0	1	TC1-D0901-XX
12	25	1	2	3	3	7.5	10	1	0	TC1-D1210-XX
								0	1	TC1-D1201-XX
18	32	1	3	5	5	10	15	1	0	TC1-D1810-XX
								0	1	TC1-D1801-XX
22	32	2	3	5	7.5	15	20	1	0	TC1-D2210-XX
								0	1	TC1-D2201-XX
25	40	2	3	5	7.5	15	20	1	0	TC1-D2510-XX
								0	1	TC1-D2501-XX
32	50	2	5	10	10	20	25	1	0	TC1-D3210-XX
								0	1	TC1-D3201-XX
38	60	3	5	10	10	30	30	1	0	TC1-D3810-XX
								0	1	TC1-D3801-XX
40	60	3	5	10	10	30	30	1	1	TC1-D4011-XX
50	80	3	7.5	15	15	40	40	1	1	TC1-D5011-XX
65	80	5	10	20	20	50	50	1	1	TC1-D6511-XX
80	125	7.5	15	25	25	60	60	1	1	TC1-D8011-XX
95	125	7.5	15	25	25	60	60	1	1	TC1-D9511-XX

Note : Standard Fault Ratings (UL) (CSA) High Fault Ratings (UL) (100kA with class J/CC Fuse)

TC1-D09004

4 Pole Contactor with AC operating coil

Maximum Current		Maximum HP						Main Pole Configuration		Catalog Number
Inductive	Resistive	Single Phase		Three Phase						
AC-3 A	AC-1 A	120V	230V	200V	230V	480V	600V	NO	NC	
9	25	0.5	1	2	2	5	7.5	4	0	TC1-D09004-XX
		0.5	1	2	2	5	7.5	0	4	TC1-D09006-XX
		0.5	1	-	-	-	-	2	2	TC1-D09008-XX
12	25	1	2	3	3	7.5	10	4	0	TC1-D12004-XX
		1	2	3	3	7.5	10	0	4	TC1-D12006-XX
		1	2	-	-	-	-	2	2	TC1-D12008-XX
25	40	2	3	5	7.5	15	20	4	0	TC1-D25004-XX
		2	3	5	7.5	15	20	0	4	TC1-D25006-XX
		2	3	-	-	-	-	2	2	TC1-D25008-XX
40	60	3	5	10	10	30	30	4	0	TC1-D40004-XX
		3	5	-	-	-	-	2	2	TC1-D40008-XX
65	80	5	10	20	20	50	50	4	0	TC1-D65004-XX
		5	10	-	-	-	-	2	2	TC1-D65008-XX
80	125	7.5	15	20	25	60	60	4	0	TC1-D80004-XX
		7.5	15	-	-	-	-	2	2	TC1-D80008-XX

TC2-D09••-XX

3 Pole Mechanically Interlocked Contactor with AC coil (Pre-wired)

Maximum Current		Maximum HP 3 Phase				Aux. Contacts Built-In per contactor		Catalog Number
Inductive AC-3 A	Resistive AC-1 A							
		200V	290V	480V	600V	NO	NC	
9	25	2	2	5	7.5	0	1	TC2-D0901-XX
						1	0	TC2-D0911-XX
12	25	3	3	7.5	10	0	1	TC2-D1201-XX
						1	0	TC2-D1211-XX
18	32	5	5	10	15	0	1	TC2-D1801-XX
						1	0	TC2-D1811-XX
22	32	5	5	10	15	0	1	TC2-D2201-XX
						1	0	TC2-D2211-XX
25	40	5	7.5	15	20	0	1	TC2-D2501-XX
						1	0	TC2-D2511-XX
32	50	10	10	20	25	0	1	TC2-D3201-XX
						1	0	TC2-D3211-XX
38	50	10	10	20	25	0	1	TC2-D3801-XX
						1	0	TC2-D3811-XX
40	60	10	10	30	30	1	1	TC2-D4011-XX
50	80	15	15	40	40	1	1	TC2-D5011-XX
65	80	20	20	50	50	1	1	TC2-D6511-XX
80	125	20	25	60	60	1	1	TC2-D8011-XX
95	125	20	25	60	60	1	1	TC2-D9511-XX

Replace XX with voltage code from table - 1

Table-1 : XX-AC Coil Voltages

Volts AC	24	48	110	120	208	220	230	240	277	380	400	415	440	480	575	600
50 Hz	B5	E5	F5	-	-	M5	P5	U5	-	Q5	V5	N5	R5	-	-	-
60 Hz	B6	E6	F6	G6	L6	M6	-	U6	W6	Q6	-	-	R6	T6	S6	X6
50/60 Hz	B7	E7	F7	G7	-	M7	P7	U7	-	Q7	V7	N7	R7	-	-	-

3 & 4 Pole Contactors with DC operating coil
Specifications

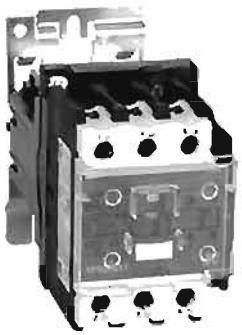

TP1-D40••-XX

3 Pole Contactor with DC operating coil

Maximum Current		Maximum HP						Aux. Contacts Built-in per contactor		Catalog Number
Inductive	Resistive	Single Phase		Three Phase						
AC-3 A	AC-1 A	120V	230V	200V	230V	480V	600V	NO	NC	
9	25	0.5	1	2	2	5	7.5	1	0	TP1-D0910-XX
								0	1	TP1-D0901-XX
12	25	1	2	3	3	7.5	10	1	0	TP1-D1210-XX
								0	1	TP1-D1201-XX
18	32	1	3	5	5	10	15	1	0	TP1-D1810-XX
								0	1	TP1-D1801-XX
22	32	1	3	5	5	10	15	1	0	TP1-D2210-XX
								0	1	TP1-D2201-XX
25	40	2	3	5	7.5	15	20	1	0	TP1-D2510-XX
								0	1	TP1-D2501-XX
32	50	2	5	10	10	20	25	1	0	TP1-D3210-XX
								0	1	TP1-D3201-XX
38	50	2	5	10	10	20	25	1	0	TP1-D3810-XX
								0	1	TP1-D3801-XX
40	60	3	5	10	10	30	30	1	1	TP1-D4011-XX
50	80	3	7.5	15	15	40	40	1	1	TP1-D5011-XX
65	80	5	10	20	20	50	50	1	1	TP1-D6511-XX
80	125	7.5	15	20	25	60	60	1	1	TP1-D8011-XX

Note : Standard Fault Ratings (UL) (CSA) High Fault Ratings (UL) (100kA with Fuse of class J/CC)

TP1-D2500•-XX

4 Pole Contactor with DC operating coil

Maximum Current		Maximum HP						Main Pole Configuration		Catalog Number
Inductive	Resistive	Single Phase		Three Phase						
AC-3 A	AC-1 A	120V	230V	200V	230V	480V	600V	NO	NC	
9	25	0.5	1	2	2	5	7.5	4	0	TP1-D09004-XX
		0.5	1	2	2	5	7.5	0	4	TP1-D09006-XX
		0.5	1	-	-	-	-	2	2	TP1-D09008-XX
12	25	1	2	3	3	7.5	10	4	0	TP1-D12004-XX
		1	2	3	3	7.5	10	0	4	TP1-D12006-XX
		1	2	-	-			2	2	TP1-D12008-XX
25	40	2	3	5	7.5	15	20	4	0	TP1-D25004-XX
		2	3	5	7.5	15	20	0	4	TP1-D25006-XX
		2	3	-	-	-	-	2	2	TP1-D25008-XX
40	60	3	5	10	10	30	30	4	0	TP1-D40004-XX
		3	5	-	-	-	-	2	2	TP1-D40008-XX
65	80	5	10	20	20	50	50	4	0	TP1-D65004-XX
		5	10	-	-	-	-	2	2	TP1-D65008-XX
80	125	7.5	15	20	25	60	60	4	0	TP1-D80004-XX
		7.5	15	-	-	-	-	2	2	TP1-D80008-XX

Note : Standard & High Fault Ratings (UL) (100kA with Fuse of class J/CC)

Low Height DC Contactor : 9A ~ 25A *

Maximum Current		Maximum HP 1 Phase		Maximum HP 3 Phase				Catalog Number
Inductive AC-3 A	Resistive AC-1 A	120V	230V	200V	230V	480V	600V	
9	25	0.5	1.0	2	2	5	7.5	TP1-DC09-XX
12	25	1.0	2.0	3	3	7.5	10	TP1-DC12-XX
25	40	2.0	3.0	5	7.5	15	20	TP1-DC25-XX

Replace XX with voltage code from table - 2

Table - 2: XX-DC Coil Voltages

Volts DC	12	24	48	72	110	125	220	250	440
	JD	BD	ED	SD	FD	GD	MD	UD	RD

*Under UL approval

Accessories, Spare Coils

Power Connectors Wire Sets for Reversing Contactors

TA9-D1269

With Two Identical Contactors	Catalog Number
TC1-D09, TC1-D12, TP1-D09, TP1-D12	TA9-D1269
TC1-D18, TP1-D18	TA9-D1869
TC1 D25, TP1 D25	TA9 D2569
TC1 D32, TP1 D32	TA9 D3269
TP1-D40, TP1 D65, *C1-D40, TC1-D50, TC1 D65	TA9-D6569
TC1 D80, TP1-D80, TC1 D 95	TA9 D8069

Mechanical / Electric Interlocks Horizontally Mounted

Use for Contactor	Mechanical	Electromechanical
TCA2DN, TCA3DN	LA9D09978	ELA9D09978
TC1D09 - D32, TP1D09 - D32		
TC1D40 - D65, TP1D40 - D65	LA9D50978	ELA9D50978
TC1D80 - D95 TP1D80	LA9D80978	ELA9D80978

TA9RC980U

Coil Suppressor

Description	Voltage Ratings	Catalog Number
Varistor (AC/DC)	24 - 48V AC/DC	TA9AMOV980E
Clip-on mounting for 9-95A Contactor	110 - 240V AC/DC	TA9AMOV980U
RC Circuit (AC)	24 - 48V AC	TA9RC980E
Clip-on mounting for 9A-95A Contactor	110 - 240V AC	TA9RC980U
	380 - 440V AC	TA9RC980N

LA9 D09978

Spare Coils (AC)

Use for contactor AC	Catalog Number
TC1-D09-D22	TX1-D2-XX
TC1-D25-D38	TX1-D4-XX
TC1-D40-D95	TX1-D6-XX

Replace XX with voltage code from table - 3

Table-3: XX-AC Coil Voltages

Volts AC	24	48	110	120	208	220	240	277	380	415	440	480	575	600
50 Hz	B5	E5	F5			M5	U5		Q5	N5	R5			
60 Hz	B6	E6	F6	G6	L6	M6	U6	W6	Q6		R6	T6	S6	X6
50/60 Hz	B7	E7	F7	G7		M7	U7		Q7	N7	R7			

TX1-D•-XX

Spare Coils (DC)

Use for contactor DC	Catalog Number
TP1 D09 - TP1-D22	TX4 D2 XX
TP1-D25 - TP1-D38	TX4-D4-XX
TP1-D40 - TP1-D65	TX4-D40-XX
TP1-D80	TX4-D80-XX
TP1-DC09 - TP1-DC12	TX4-DC2-XX *available coil voltage
TP1 DC25	TX4 DC4 XX *available coil voltage

Replace XX with voltage code from table - 4

Table-4: XX-DC Coil Voltages

Volts DC	12	24*	48*	72	110*	125	220*	250	440
	JD	BD	ED	SD	FD	GD	MD	UD	RD

LA6-DK01

Mechanical Latching Blocks

Description of Contactors	Catalog Number
For Contactors up to 32 Amps	LA6DK01-XX

Replace XX with voltage code from table - 5 / 6

For Mechanical Latching Block	Table 5: For AC Voltage										
	24	48	110-115	120-127	220-225	230-240	380	400-415	440	500	660
LA6-DK01	B	E	F	G	M	U	Q	N	R	S	Y

For Mechanical Latching Block	Table-6: For DC Voltage						
	24	48	72	110-115	120-127	220-225	230-240
LA6-DK01	BD	ED	SD	FD	GD	MD	UD

Contactors' Dimensions with AC operating coil

Product Dimensions
TC1-D09~D38
TP1-DC09/DC12/DC25

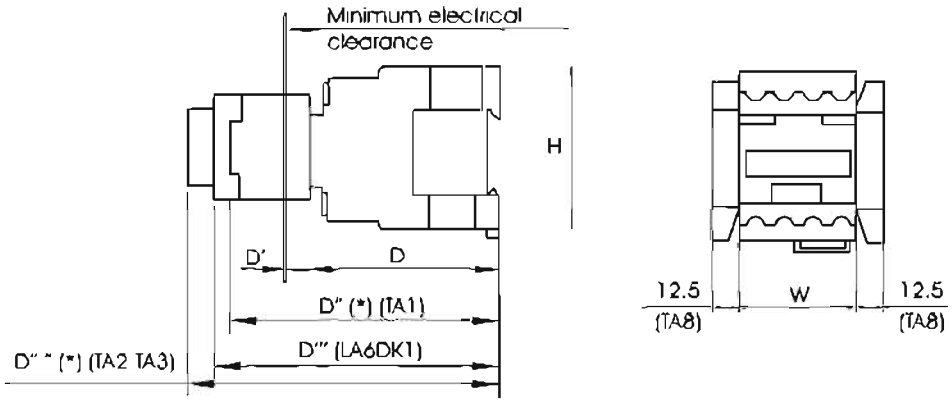

TC1-D40 ~D95

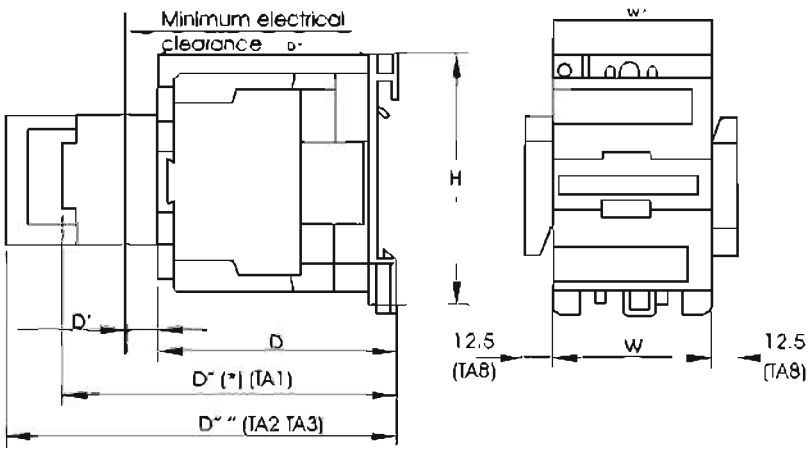

TC1-	D09	D12	D18	D22	D25	D32	D38	D40	D50	D65	D80~D95
TP1-	DC09	DC12	-	-	DC25	-	-	-	-	-	- -
W (3 Pole)	45	45	45	45	56	56	56	75	75	75	85
W' (4 Pole)	45	45	-	-	56	-	-	85	85	85	96
H (3/4 Pole)	74	74	74	74	84	84	84	127	127	127	127
D (3/4 Pole)	80	80	85	85	94	99	99	114	114	114	120
D' (3/4 Pole)	10	10	10	10	10	10	10	12	12	12	12
D" (3/4 Pole)	113	113	118	118	126	131	131	145	145	145	153
D"' (3/4 Pole)	120	120	125	125	135	140	140	-	-	-	-
D"" (3/4 Pole)	133	133	138	138	147	152	152	166	166	166	173
D'(008)	-	-	-	-	-	-	-	124	124	124	140

Panel Mounting Reference
TC1-D09~D95
TP1-DC09/DC12/DC25

TC1-D09~D38
TP1-DC09/DC12/DC25

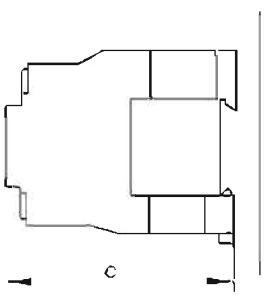

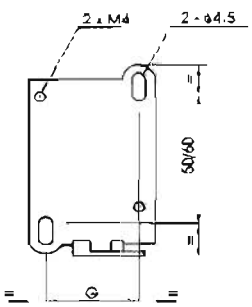

TC1-D40~D95

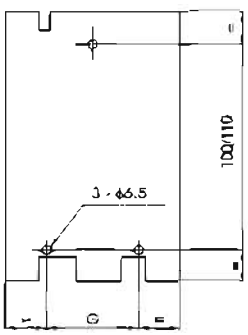

TC1-	D09	D12	D18	D22	D25	D32	D38	D40	D50	D65	D80	D95
TP1-	DC09	DC12	-	-	DC25	-	-	-	-	-	-	-
C	80	80	85	85	93	98	98	114	114	114	125	125
G	35	35	35	35	44	44	44	40	40	40	40	40

Contactors' Dimensions with DC operating coil

Product Dimensions
TP1-D09~D3810

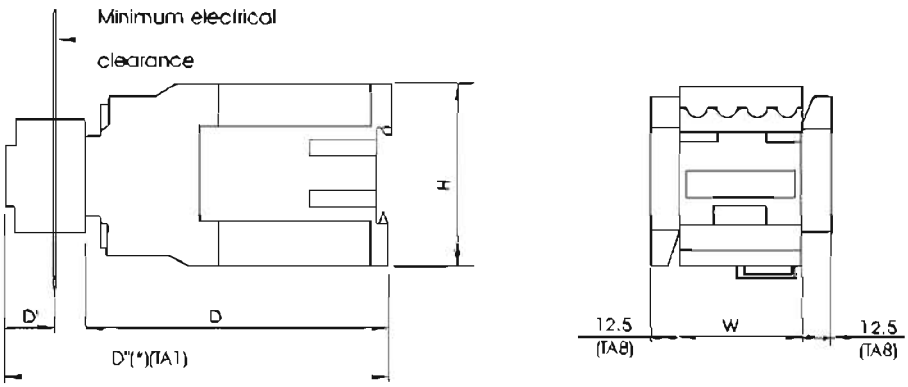

TP1-D4011~D80

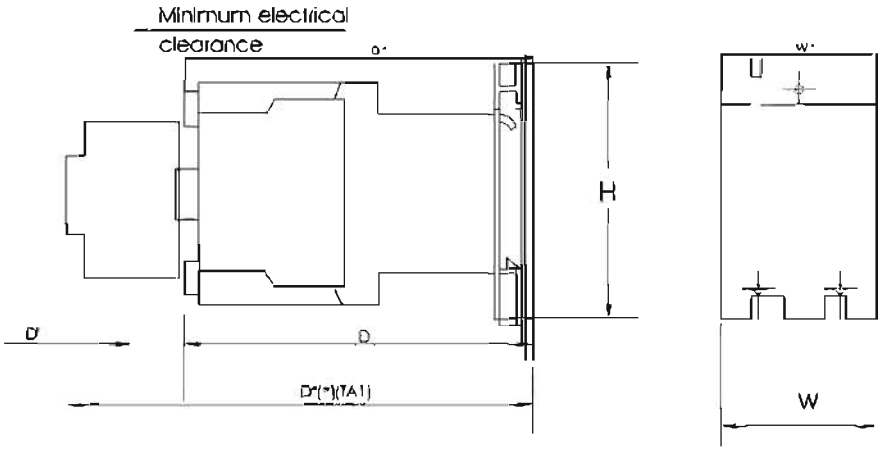

TP1-	D09	D12	D18	D22	D25	D32	D38	D40	D50	D65	D80
W (3 Pole)	45	45	45	45	56	56	56	75	75	75	85
W* (4 Pole)	45	45	-	-	56	-	-	85	85	85	96
H (3/4 Pole)	74	74	74	74	84	84	84	127	127	127	127
D (3/4 Pole)	115	115	120	120	130	135	135	171	171	171	181
D' (3/4 Pole)	10	10	10	10	10	10	10	12	12	12	12
D" (3/4 Pole)	148	148	153	153	163	168	168	202	202	202	210
D*(008)	-	-	-	-	-	-	-	181	181	181	191

Panel Mounting Reference

TP1-D09~D38 TP1-D40~D80 Mounting

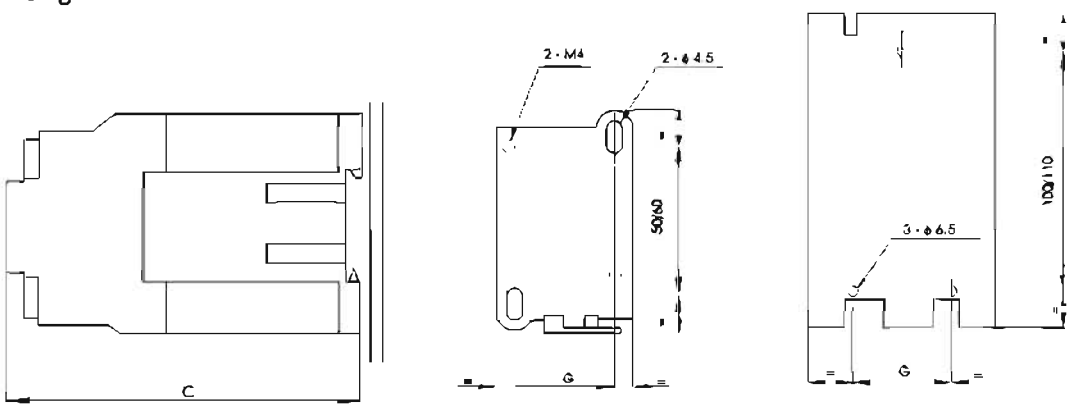

TP1-	D09	D12	D18	D22	D25	D32	D38	D40	D50	D65	D80
C	115	115	120	120	130	135	135	171	171	171	181
G	35	35	35	35	40	40	40	40	40	40	40

Control Relays
Characteristics

Environment

Type			TCA2DN	TCA3DN
Conforming to Standards			IEC 60947-1, 60947-5, VDE 0660	
Approvals			UL,CSA	
Degree of Protection	Protection against direct finger contact		Conforming to VDE 0106	
Ambient air Temperature around the device	Storage	°C	-40....+80	
	Operation	°C	-5. ..+55	
	Permissible for operation at Uc	°C	-25. ..+70	
Maximum operating altitude	Without derating	m	3000	
Operating positions	Without derating		±30° possible, in relation to normal vertical mounting plane	
Shock Resistance	Control relay open		10g	8g
1/2 sine wave for 11 ms	Control relay closed		12g	11g
Vibration Resistance 5.....300Hz	Control relay open		5g	2g
	Control relay closed		10g	3g
Cabling	Flexible or solid cable with or without cable end	mm^2	Min: 1x1;	Max.: 2x2.5

Control Circuit Characteristics

Type			TCA2DN	TCA3DN
Rated Insulation Voltage (Ui)	Conforming to IEC 947-1& IEC 947-5	V	690	
	Conforming to CSA C22-2 no. 14	V	600	
Rated control circuit voltage (Uc)		V	12...600	
Permissible voltage variation	Operational		With 50 or 60 Hz coil: 0.8 ... 1.1 Uc With 50/60Hz coil: 0.85 ... 1.1 Uc	With standard Hz coil: 0.85 ... 1.1 Uc With wide range coil: 0.7 . .1.25 Uc
Voltage limits	Drop-out		0.3 .. 0.6 Uc	0.1 .. 0.65 Uc
Average consumption at 20°C	~ 50 Hz	VA	Inrush: 60, Sealed:7	-
	~ 60 Hz	VA	Inrush: 70, Sealed:7.5	-
	~ 50/60 Hz	VA	Inrush: 70, Sealed:8	-
	With standard coil	W	-	Inrush or Sealed: 9
	With wide band coil	W	-	Inrush or Sealed: 11
Operating Time (at rated control circuit voltage and at 20°C)	Between coil energisation and opening of the NC contacts	ms	6...20	35...43
	- closing of the NO contacts	ms	12.. 22	40...48
	Between coil de-energisation and opening of the NO contacts	ms	4...12	6...14
	closing of the NC contacts	ms	6...17	11...19
Short supply failures	Max. duration without affecting hold-in of device	ms	2	2
Maximum operating rate	In operating cycles per second		3	3
Mechanical Life at Uc (mechanical durability)	In millions of operating cycles With: 50 or 60 Hz coil		20	-
	50/60 Hz coil (at 50 Hz)		30	-
	Standard coil		-	30
	Wide band coil		-	30

Operating Power of Contactor with AC Supply categories AC-14 & AC-15

Electrical life (upto 3600 operating cycles/hr) on an inductive load such as the coil of an electromagnet: making power (cosϕ 0.7) - 10 times the power broken (cos ϕ 0.4)

	V	24	48	110/127	220/230	380/400	440	600
1 million operating cycles	VA	150	300	400	480	500	500	500
3 million operating cycles	VA	80	170	250	290	320	320	320
10 million operating cycles	VA	30	65	90	120	130	130	130
Occasional making capacity	VA	1200	2600	7000	13000	15000	13000	9000

1. Breaking limit of contacts valid for maximum of 50 operating cycles at 10s intervals(breaking power=making power x cosϕ 0.7)
2. Electrical life of Contacts:
   - for 1 million operating cycles (2a);
   - for 3 million operating cycles (2b);
   - for 10 million operating cycles (2C)
4. Thermal limit

Operating Power of Contactor with DC Supply categories DC-13

Electrical life (upto 1200 operating cycles/hr) on an inductive load such as the coil of an electromagnet without economy resistor, the time constant increasing with the power.

	V	24	48	110	220	440	600
1 million operating cycles	VA	120	90	75	68	61	58
3 million operating cycles	VA	70	50	38	33	28	27
10 million operating cycles	VA	25	18	14	12	10	9
Occasional making capacity	VA	1000	700	400	260	220	170

2. Electrical life of Contacts
   - for 1 million operating cycles (2a)
   - for 3 million operating cycles (2b)
   - for 10 million operating cycles (2C)
3. Breaking limit of contacts valid for maximum of 20 operating cycles at 10s intervals and with current passing for 0.5s per operating cycle.
4. Thermal limit

Synopsis - Contactors / Control Relays

Conforming to
IEC-VDE-BS-IS
For other standards, please refer to us

Code					
	AC	TCA2-DN / TCA3-DN	TC1-D09 / TP1-D09	TC1-D12 / TP1-D12	TC1-D18 / TP1-D18	TC1-D22 / TP1-D22
	DC					
		40 31 22 -	10 01 004 006 006 TP1-DC09 01	10 01 004 006 006 TP1-DC12 01	10 01 004 -	10 01 - -
Maximum rated operational voltage		660V	690V	690V	690V	690V
Maximum rated current for motor control (3 phase 440V, 50-60Hz, for AC3 Duty)		AC 15 duty (IEC 60947-5-1) AC 11 duty (IEC 60158-4-2 [illegible])	9A	12A	18A	22A
Maximum standard power rating for motor control for AC3 Duty θ < 55°C, 415V			Kw / hp	Kw / hp	Kw / hp	Kw / hp
			4 / 5.5	5.5 / 7.5	9 / 12.5	11/15
3 phase AC3 UL-Continuous Current	230V HP	-	2	3	5	-
	460/480V HP		5	7.5	10	-
	575/600V HP	-	7.5	10	15	-
Mounting position (w.r.t. normal vertical mounting plane)		± 30°	± 30°	± 30°	± 30°	± 30°
Maximum thermal current Ith (θ < 40°C)		10A	25A	25A	32A	32A
Maximum operating rate (operations / hr)	AC	10600	3600	3600	3600	3600
	DC	3600	3600	3600	3600	3600
Average coil consumption (inrush / sealed) TC1-D	50 Hz	60 / 7 VA	60 / 7 VA	60 / 7 VA	60 / 7 VA	60 / 7 VA
	60 Hz	70/7.5 VA	70/7.5 VA	70/7.5 VA	70 / 7.5 VA	70 / 7.5 VA
	50 / 60 Hz	70 / 8 VA	70 / 8 VA	70 / 8 VA	70 / 8 VA	70 / 8 VA
TP1-D / TP1-DC	DC	9 / 9W	9/9W 150/2.75W	9/9W 150/2.75W	9 / 9W	9 / 9W
Power dissipation per pole at	AC1	1.56W	1.56W	1.56W	2.5W	2.5W
	AC3	0.20W	0.20W	0.36W	0.80W	0.80W
Mechanical life (in millions of operations) TC1-D	50 or 60 Hz	30	20	20	20	20
	TC1-D (50/60Hz)/TP1-DC	20	15/15	15/15	15/-	15/-
	TP1-D	30	30	30	30	30
Power contact terminal capacity mm²		2.5	4	4	6	6
Overall dimensions in mm	TC1-D	70x45	70x45	80x45	85x45	85x45
	TP1-DC	60mm	60mm	60mm	85mm	85mm
Projection (TCA2-D/TC1-D/TP1-DC)						
Over-all dimensions in mm	TP1-D	70x45	70x45	80x45	85x45	85x45
Projection (TCA3-D/TP1-D)		115mm	115mm	115mm	120mm	120mm
Weight (TC1-D/TP1-D/TP1-DC)	kg		0.32/0.58/0.32	0.32/0.60/0.32	0.35/0.65/-	0.35/0.85/-
Weight (TCA2/TCA3)	kg	0.32/0.58				

Control Relays
Selection / Dimensions

TCA2-DN••-XX

TCA3-DN••-XX

Control Relays (AC)

Contacts		Catalog Number
NO	NC	
2	2	TCA2-DN22-XX
3	1	TCA2-DN31-XX
4	0	TCA2-DN40-XX

Replace XX with voltage code from table - 7

Table-7 : XX-AC Coil Voltages

Volts AC	24	48	110	120	208	220	230	240	277	380	400	415	440	480	575	600
50 Hz	B5	E5	F5			M5	P5	U5		Q5	V5	N5	R5			
60 Hz	B6	E6	F6	G6	L6	M6		U6	W6	Q6			R6	T6	S6	X6
50/60 Hz	B7	E7	F7	G7		M7	P7	U7		Q7	V7	N7	R7			

Control Relays (DC)

Contacts		Catalog Number
NO	NC	
2	2	TCA3-DN22-XX
3	1	TCA3-DN31-XX
4	0	TCA3-DN40-XX

Replace XX with voltage code from table - 8

Table - 8: XX-DC Coil Voltages

Volts DC	12	24	48	72	110	125	220	250	440
	JD	BD	ED	SD	FD	GD	MD	UD	RD

Independant Mounting

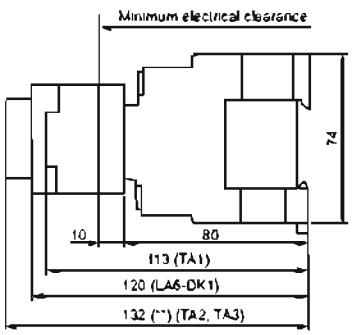

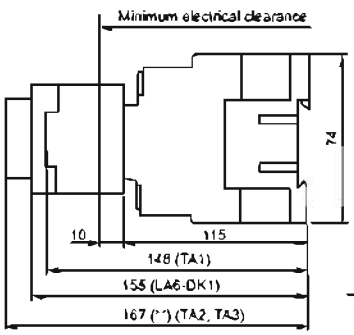

** + 4mm with lead sealing kit

Panel Mounting

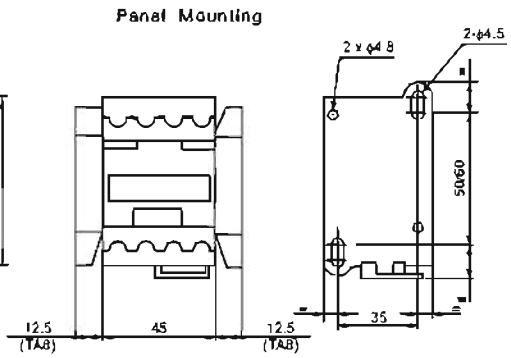

AC Supply categories AC-14 & AC-15

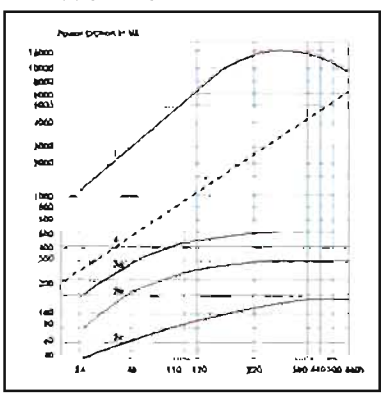

DC Supply categories DC-13

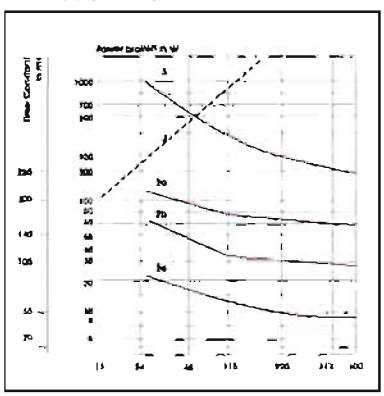

Synopsis - Contactors / Control Relays

Conforming to
IEC-VDE-BS-IS
For other standards, please refer to us

Code					
	AC	TCA2-DN / TCA3-DN	TC1-D09 / TP1-D09	TC1-D12 / TP1-D12	TC1-D18 / TP1-D18	TC1-D22 / TP1-D22
	DC					
		40 31 22 -	10 01 004 006 006 TP1-DC09 01	10 01 004 006 006 TP1-DC12 01	10 01 004 -	10 01 - -
Maximum rated operational voltage		660V	690V	690V	690V	690V
Maximum rated current for motor control (3 phase 440V, 50-60Hz, for AC3 Duty)		AC 15 duty (IEC 60947-5-1) AC 11 duty (IEC 60158-4-2 [illegible])	9A	12A	18A	22A
Maximum standard power rating for motor control for AC3 Duty θ < 55°C, 415V			Kw / hp	Kw / hp	Kw / hp	Kw / hp
			4 / 5.5	5.5 / 7.5	9 / 12.5	11/15
3 phase AC3 UL-Continuous Current	230V HP	-	2	3	5	-
	460/480V HP		5	7.5	10	-
	575/600V HP	-	7.5	10	15	-
Mounting position (w.r.t. normal vertical mounting plane)		± 30°	± 30°	± 30°	± 30°	± 30°
Maximum thermal current Ith (θ < 40°C)		10A	25A	25A	32A	32A
Maximum operating rate (operations / hr)	AC	10600	3600	3600	3600	3600
	DC	3600	3600	3600	3600	3600
Average coil consumption (inrush / sealed) TC1-D	50 Hz	60 / 7 VA	60 / 7 VA	60 / 7 VA	60 / 7 VA	60 / 7 VA
	60 Hz	70/7.5 VA	70/7.5 VA	70/7.5 VA	70 / 7.5 VA	70 / 7.5 VA
	50 / 60 Hz	70 / 8 VA	70 / 8 VA	70 / 8 VA	70 / 8 VA	70 / 8 VA
TP1-D / TP1-DC	DC	9 / 9W	9/9W 150/2.75W	9/9W 150/2.75W	9 / 9W	9 / 9W
Power dissipation per pole at	AC1	1.56W	1.56W	1.56W	2.5W	2.5W
	AC3	0.20W	0.20W	0.36W	0.80W	0.80W
Mechanical life (in millions of operations) TC1-D	50 or 60 Hz	30	20	20	20	20
	TC1-D (50/60Hz)/TP1-DC	20	15/15	15/15	15/-	15/-
	TP1-D	30	30	30	30	30
Power contact terminal capacity mm²		2.5	4	4	6	6
Overall dimensions in mm	TC1-D	70x45	70x45	80x45	85x45	85x45
	TP1-DC	60mm	60mm	60mm	85mm	85mm
Projection (TCA2-D/TC1-D/TP1-DC)						
Over-all dimensions in mm	TP1-D	70x45	70x45	80x45	85x45	85x45
Projection (TCA3-D/TP1-D)		115mm	115mm	115mm	120mm	120mm
Weight (TC1-D/TP1-D/TP1-DC)	kg		0.32/0.58/0.32	0.32/0.60/0.32	0.35/0.65/-	0.35/0.85/-
Weight (TCA2/TCA3)	kg	0.32/0.58				

T-Range

Coil Selection Chart

For Contactor Type	Coil Reference	Replace with ■ or ■ following codes																					
Voltage →		12	24	48	72	110	120	125	208	220	230	240	250	277	380	400	415	440	480	575	600
TC1-D09-12	TA1 D7 ■	60H1		B6	G6		F6				A6	P6	J6			G6	S6	R6	F6		
TP1-D25-09	TA1 D4 ■	60H1		B6	G6		F6	F6		L6	A6		J6		W6	G6			F6	T6	T6	B6
TC1-D09-10	TA1 D7 ■	50M2-12		B1	G		F7	G7			A7	P7	J3			Q1	S7	R7	F3		
TP1-D09-01	TA4 D7 ■			M0	M0	P0	M0		M0		M0	P0		M0		U0	V0	N0	P0		
TP1-D25-09	TA4 D4 ■			M0	M0	P0	P0		P0		M0	P0		M0		D0	V0	N0	P0		
TP1-D40-10	TA4 D7 ■			M0	M0	P0	M0		M0		M0	P0		M0		P0	V0	N0	P0		
TP1-D09-17	TA4 D72 ■			B0	E0		F0				B0										
TP1-D09	TA4 D04 ■			A0	H0		H0				M0										

TC1-D25 ● ■ / TP1-D25 ● ■	TC1-D32 ● ■ / TP1-D32 ● ■	TC1-D38 ● ■ / TP1-D38 ● ■	TC1-D40 ● ■ / TP1-D40 ● ■	TC1-D50 ● ■ / TP1-D50 ● ■	TC1-D65 ● ■ / TP1-D65 ● ■	TC1-D80 ● ■ / TP1-D80 ● ■	TC1-D95 ● ■
10	10	10	-	-	-	-	-
01	01	01	11	11	11	11	11
004	-	-	004	-	004	004	-
008	-	-	008	-	008	008	-
006							
TP1-DC25 01 ■							
690V	690V	690V	690V	690V	690V	690V	690V
25A	32A	38A	40A	50A	65A	80A	95A
Kw / hp	Kw / hp	Kw / hp	Kw / hp	Kw / hp	Kw / hp	Kw / hp	Kw / hp
11 / 15	15 / 20	18.5/25	22 / 30	25 / 35	37 / 50	45 / 60	45 / 60
7.5	10	-	10	15	20	25	25
15	20	-	30	40	50	60	60
20	25	-	30	40	50	60	60
+ 30°	+ 30°	- 30°	+ 30°	+ 30°	- 30°	+ 30°	+ 30°
40A	50A	50A	60A	80A	60A	125A	125A
3600	3600	3600	3600	3600	3600	3600	3600
3600	3600	3600	3600	3600	3600	3600	-
90 / 7.5 VA	90 / 7.5 VA	90 / 7.5 VA	200 / 20 VA	200 / 20 VA	200 / 20 VA	200 / 20 VA	200 / 20 VA
100 / 8.5 VA	100 / 8.5 VA	100 / 8.5 VA	200 / 22 VA	200 / 22 VA	200 / 22 VA	200 / 22 VA	200 / 22 VA
100 / 8.5 VA	100 / 8.5 VA	100 / 8.5 VA	245 / 26 VA	245 / 26 VA	245 / 26 VA	245 / 26 VA	245 / 26 VA
11/11W 250/3.5W	11 / 11W	11 / 11W	22 / 22W	22 / 22W	22 / 22W		
3.2W	5W	5W	5.4W	9.6W	6.4W	12.5W	12.5W
1.25W	2W	2W	2.4W	3.7W	4.2W	5.1W	7.2
16	16	16	16	16	16	10	10
12/12	12/-	12/-	6/-	6/-	6/-	4/-	4/-
25	25	25	20	20	20	20	
10	10	10	25	25	25	50	50
93mm	98mm	98mm	114mm	114mm	114mm	125mm	125mm
130mm	135mm	135mm	171mm	171mm	171mm	181mm	
0.505/0.88/0.505	0.525/0.88/-	0.525/0.88/-	1.15 / 2.17/-	1.15 / 2.12 /-	1.15 / 2.18/ -	1.5 / 2.22 /-	1.9 / - /-

3 & 4 Pole Contactors

Characteristics

General Characteristics

Type		Unit	LC1-FDP115A-800A, LC1FDP1154A-8004A
Rated Insulation Voltage (Ui)			
	IEC 60947-4-1	V	1500
Conforming to Standards			NFCEN60947, VDE0660, BSEN60947, JEM1038, IEC60947-1 & IEC60947-4
Approvals			UL*, CSA, IEC
Protective treatment	Standard Version		"TH"
Ambient air temperature	Storage	°C	-60 to +80
(around the device)	Operation	°C	-5 to +55 (0.8 to 1.1 Uc)
	Permissible	°C	-50 to +70, for operation at Uc
Maximum operating altitude	Without derating	Mtr.	3000
Operating position	Without derating		+30° possible, in relation to normal vertical mounting plane

* 4 Pole contactor under (UL) approval

Pole Characteristics

TYPE	LC1-FDP	UNIT	115A	150A	185A	225A	265A	330A	400A	500A	630A	800A
Number of Poles (Power)			3 or 4	3 or 4	3 or 4	3 or 4	3 or 4	3 or 4	3 or 4	3 or 4	3 or 4	3 or 4
Rated current (Ie) in AC-3 0< 55°c		A	115	150	185	225	265	330	400	500	630	800
Rated operating voltage upto		V	1000	1000	1000	1000	1000	1000	1000	1000	1000	1000
Frequency limits of the operating current		Hz	25-200	25-200	25-200	25-200	25-200	25-200	25-200	25-200	25-200	25-200
Rated thermal current (Ith) 0< 40°C		A	200	250	275	315	350	400	500	700	1000	1000
Rated making capacity Irms accorming to IEC-60947-4		A	1300	1700	2100	2460	2940	3600	4500	5550	6740	-
Rated breaking capacity	220-440V	A	1300	1500	1800	2050	2450	3000	4000	5000	6300	-
Irms conforming to IEC-60947-4	500V	A	1100	1200	1600	1850	2200	2810	3500	4500	5400	-
	690V	A	900	1100	1200	1350	1700	2350	3050	3560	4600	-
Average impedance per pole at Ith & 50 Hz		MILLI Ω	0.4	0.4	0.36	0.36	0.32	0.28	0.28	0.18	0.12	0.12
Power dissipation per pole for above operational current AC-3		W	6	8	12	18	22	31	45	45	48	48
Tightening Torque	Power Circuit	Nm	10	18	18	35	35	35	35	35	58	58
Cabling			Maximum CSA									
No of Bars			2	2	2	2	2	2	2	2	2	2
Bar		mm	20x3	25x3	25x3	32x4	32x4	30x5	30x5	40x5	60x5	60x5
Cable with Lug		mm	95	120	150	185	240	240	2x150	2x240	-	-
Cable with connector		Sqmm	95	120	150	185	240	-	-	-	-	-
Bolt Diameter		Sqmm	8	8	8	10	10	10	10	10	12	12

Control Circuit Characteristics

TYPE (LC1-F)		UNIT	115A	150A	185A	225A	265A	330A	400A	500A	630A	800A
Rated control circuit voltage (Uc)	50 or 60 Hz	V	24...600						48.. 600		48...600	48...600
Control voltage limits	Operational		0.85 - 1.10Uc						0.85-1.10Uc		0.85-1.10Uc	0.85-1.10Uc
Temperature 0<55°C	Drop out		0.35 - 0.55Uc						0.3-0.5Uc		0.25-0.5Uc	0.25-0.5Uc
Average consumption at 20 °C and at Uc, 50/60 Hz coil	Operational											
Average consumption at 20 °C and at Uc, AC 50 / 60hz	In rush 50 Hz coil	VA	550	550	805	805	1200	700	1075	1100	1650	1900
	In rush 60 Hz coil	VA	660	660	970	970	1445	700	1075	1100	1650	1900
	In rush 40 - 400 Hz coil	VA	-	-	-	-	700	700	1075	1100	1650	1900
	In rush Cosϕ		0.28	0.28	0.3	0.3	0.9	0.9	0.9	0.9	0.9	0.9
	Sealed 50 Hz coil	VA	45	45	55	55	95	10	15	18	22	15
	Sealed 60 Hz coil	VA	55	55	66	66	110	10	15	18	22	15
	Sealed 40 - 400 Hz coil	VA	-	-	-	-	10	10	15	18	22	22
	Sealed Cosϕ		0.28	0.28	0.3	0.3	0.9	0.9	0.9	0.9	0.9	0.9
Average operating time at Uc	Closing time "C"	msec	23-35	23-35	20-35	20-35	30-65	30-65	40-75	40-75	40-80	40-80
	Opening time "O"	msec	5-15	5-15	7-15	7-15	100-170	100-170	100-170	100-170	100-200	100-200
Mechanical life Uc (Mechanical durability) in millions of operating cycles	50 or 60 Hz coil	Cycles	10	10	10	10	10	10	10	10	5	5
	50/60 Hz coil	Cycles	10	10	10	10	10	10	10	10	5	5
Maximum operating rate	In operating cycle/hour		2400	2400	2400	2400	2400	2400	2400	2400	1200	1200
Tightening Torque	Power Circuit Connection	Nm	1.2	1.2	1.2	1.2	1.2	1.2	1.2	1.2	1.2	1.2
Cabling			Minimum / Maximum C.S.A									
Flexible Cable without cable end	1or 2 Conductors	Sqmm	1/4	1/4	1/4	1/4	1/4	1/4	1/4	1/4	1/4	1/4
Flexible Cable with end	1 Conductor	Sqmm	1/4	1/4	1/4	1/4	1/4	1/4	1/4	1/4	1/4	1/4
Flexible Cable wiht end	2 Conductors	Sqmm	1/2.5	1/2.5	1/2.5	1/2.5	1/2.5	1/2.5	1/2.5	1/2.5	1/2.5	1/2.5
Solid Cable without cable end	1 or 2 Conductors	Sqmm	1/4	1/4	1/4	1/4	1/4	1/4	1/4	1/4	1/4	1/4

Contactors' Selection Guide
(according to the required electrical life)

Use in Category AC-1 (Ue < 440V). Control of resistive circuits (cos φ > 0.95). The current broken (I_c) in category AC-1 is equal to the current (Ie) normally drawn by the load.

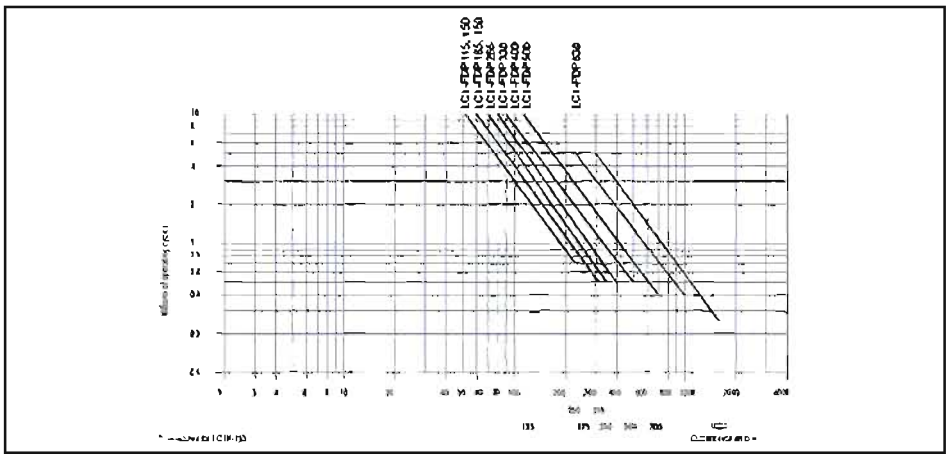

Use in Category AC-3 (Ue < 440V). Control of 3-phase asynchronous squirrel cage motors with breaking whilst motor running. The current broken (I_c) in category AC-3 is equal to the current (I_e) normally drawn by the load.

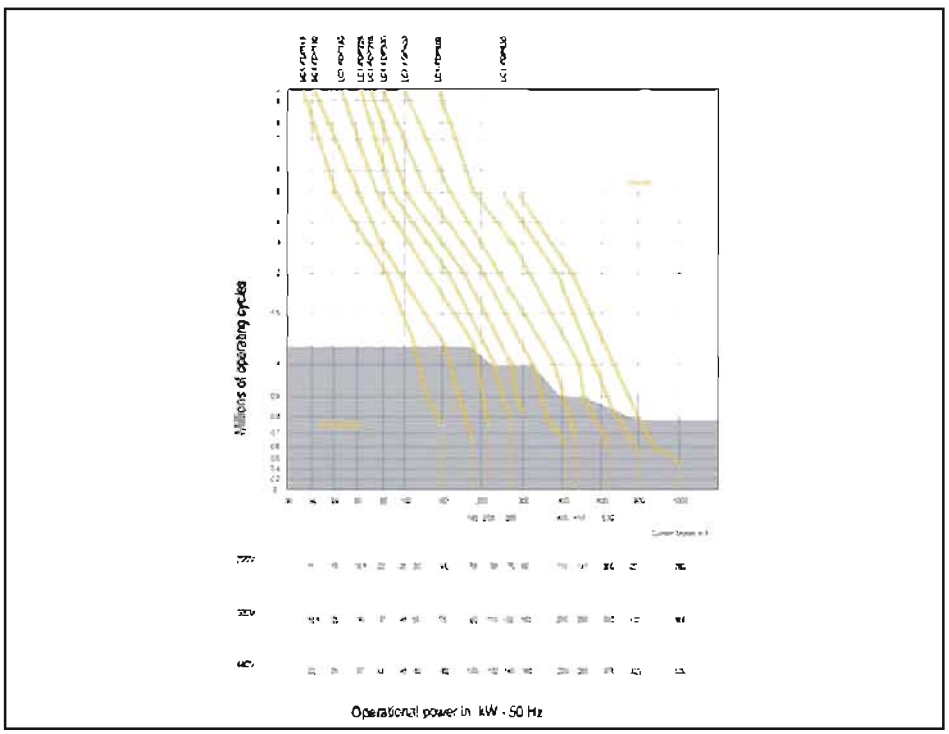

Use in Categories AC-2, AC-4 (Ue < 440V). Control of 3-phase asynchronous squirrel cage (AC-4) or slip ring (AC-2) motors with breaking whilst motor stalled. The current broken in category AC-4 is equal to 6xI_e. (I_e=rated operational current of the motor).

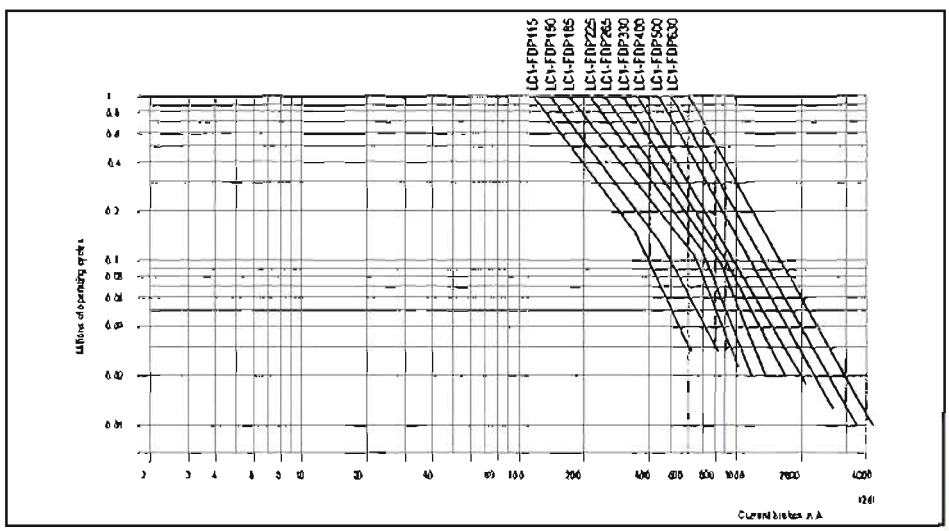

Contactors' Specifications, Spare Coils

3 Pole Contactor (without AC or DC operating coil)

LC1-FDP115A-XX

Maximum Current		Maximum HP Rating				Main Pole Configuration		Catalog Number
Inductive AC-3 A	Resistive AC-1 A	200V	230V	480V	600V	NO	NC	
115	200	30	40	75	100	3	-	LC1-FDP115A-■
150	250	40	50	100	125	3	-	LC1-FDP150A-■
185	275	50	60	125	150	3	-	LC1-FDP185A-■
225	315	50	65	130	155	3	-	LC1-FDP225A-■
265	350	60	75	150	200	3	-	LC1-FDP265A-■
330	400	75	100	200	250	3	-	LC1-FDP330A-■
400	500	100	125	250	300	3	-	LC1-FDP400A-■
500	700	150	200	400	500	3	-	LC1-FDP500A-■
630	1000	250	300	600	800	3	-	LC1-FDP630A-■
800	1000	Current rated				3	-	LC1-FDP800A-■

Note : 115A - 630A (UL) & 115A - 780A (CSA) approved (only for Standard Fault Ratings)

4 Pole Contactor (without AC or DC operating coil)

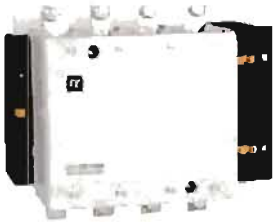

LC1-FDP1154A-XX

Maximum Current		Maximum HP 3 Phase				Main Pole Configuration		Catalog Number
Inductive AC-3 A	Resistive AC-1 A	200V	230V	480V	600V	NO	NC	
115	200	30	40	75	100	4	-	LC1-FDP1154A■
150	250	40	50	100	125	4	-	LC1-FDP1504A■
185	275	50	60	125	150	4	-	LC1-FDP1854A■
225	315	50	65	130	155	4	-	LC1-FDP2254A■
265	350	60	75	150	200	4	-	LC1-FDP2654A-■
330	400	75	100	200	250	4	-	LC1-FDP3304A-■
400	500	100	125	250	300	4	-	LC1-FDP4004A-■
500	700	150	200	400	500	4		LC1-FDP5004A■
630	1000	250	300	600	800	4	-	LC1-FDP6304A■

- If Contactors are required with coil replace ■ with coil codes given below
- 4P Contactors' (UL)/(CSA) listing under process

Coils (Replace ■ with coil code)

For Contactors	Catalog Number	
	AC	DC
F115A - F150	LX1FFXX	LX4FFXX
F185 - F225	LX1FGXX	LX4FGXX
F265 - F330	LX1FH,2XX	LX4FHXX
F400	LX1FJXX	LX4FJXX
F500	LX1FKXX(3P)LX1FLXX(4P)	LX4FKXX(3P)LX4FLXX(4P)
F630	LX1FLXX	LX4FLXX
F800	LX4F8XX	LX4F8XX

Replace XX with voltage rating from Table -9 for AC Coil & from table 10 for DC Coil

LX1-FF-XX

Table-9: XX-AC Coil Voltages

Contactor	Volts AC	24	48	110	115	120	127	200	208	220	230	240	277	380	400	415	440	480	500	600	660
F115, F150	50 Hz	✓	✓	✓	×	×	✓	×	×	✓	✓	✓	×	✓	✓	✓	✓	×	✓	✓	×
F185, F225	60 Hz	✓	✓	✓	✓	✓	×	✓	✓	✓	✓	✓	✓	✓	✓	✓	✓	✓	×	✓	✓
F265, F330	40-400Hz	✓	✓	✓	✓	✓	✓	✓	✓	✓	✓	✓	×	✓	×	✓	×	✓	✓	✓	×
F400,F500,F630	40-400Hz	×	✓	✓	×	✓	✓	✓	✓	✓	✓	✓	✓	✓	✓	✓	✓	×	✓	✓	×
F800	40-400Hz	×	✓	✓	×	✓	✓	✓	✓	✓	✓	✓	✓	✓	✓	✓	✓	×	✓	✓	×

- If 24V, 50Hz Coil is required, replace XX with 24V, 50Hz

Table-10: XX-DC Coil Voltages

Volt DC	24	48	110	120	125	220	240	250	440
F115, F150, F185	✓	✓	✓	×	✓	✓	×	✓	✓
F225, F265, F330	✓	✓	✓	×	✓	✓	×	✓	✓
F115, F150, F185	✓	✓	✓	×	✓	✓	×	✓	✓
F400,F500	✓	✓	✓	×	✓	✓	×	✓	✓
F630	×	✓	✓	×	✓	✓	×	✓	✓
F800	×	×	✓	✓	×	✓	✓	✓	✓

Note : Protected shrouds for main poles available & to be ordered seperately

LA9-FF970

Mechanical Interlocks Horizontally Mounted

For Contactor Type	Catalog Number
LC1-FDP115A	LA9-FF970
LC1-FDP150A	
LC1-FDP185A	LA9-FG970
LC1-FDP225A	
LC1-FDP265A	LA9-FJ970
LC1-FDP330A	
LC1-FDP400A	
LC1-FDP500A	
LC1-FDP630A / LC1-FDP800A	LA9-FL970

Mechanical Interlocks Vertically Mounted

For Contactor Type	Catalog Number
LC1-FDP115A	LA9-FF4F
LC1-FDP150A	
LC1-FDP185A	LA9-FG4G
LC1-FDP225A	
LC1-FDP265A	LA9-FH4H
LC1-FDP330A	LA9-FJ4J
LC1-FDP400A	
LC1-FDP500A	LA9-FK4K
LC1-FDP630A / LC1-FDP800A	LA9-FL4L

LA9-FH4H

Main Contact Sets** for 3 Pole Contactor

For Contactor Type	Catalog Number
LC1-FDP115A	LA5-FF431 (F115)
LC1-FDP150A	LA5-FF431 (F150)
LC1-FDP185A	LA5-FG431 (F185)
LC1-FDP225A	LA5-FG431 (F225)
LC1-FDP265A	LA5-FH431 (F265)
LC1-FDP330A	LA5-F400803 (F330)
LC1-FDP400A	LA5-F400803 (F400)
LC1-FDP500A	LA5-F500803 (F500)
LC1-FDP630A	LA5-F630803 (F630)
LC1-FDP800A	LA5-F800803 (F800)

Main Contact Sets** for 4 Pole Contactor

For Contactor Type		Catalog Number
LC1-FDP1154A		LA5-FF441 (F1154)
LC1-FDP1504A		LA5-FF441 (F1504)
LC1-FDP1854A		LA5-FG441 (F1854)
LC1-FDP2254A		LA5-FG441 (F2254)
LC1-FDP2654A		LA5-FH441 (F2654)
LC1-FDP3304A		LA5-F400804 (F3304)
LC1-FDP4004A		LA5-F400804 (F4004)
LC1-FDP5004A		LA5-F500804 (F5004)
LC1-FDP6304A		LA5-F630804 (F6304)

** For 3-pole contact (per pole: 2 fixed contacts and moving contacts, 2 deflectors, 1 back plate, fixing screws and washers).

Contactors' Dimensions with AC/DC operating coil

LC1-FDP115...330A

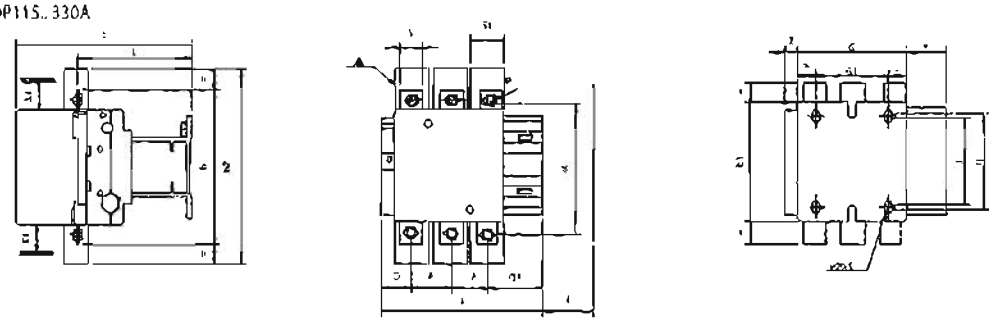

LC1-FDP1154...2654A

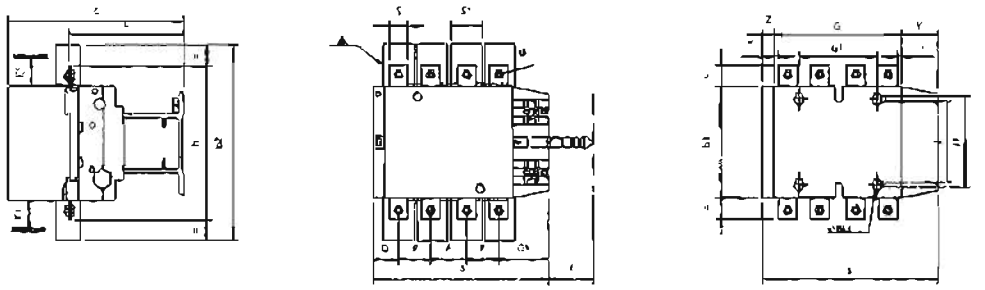

f, minimum distance required for coil removal.
▲ Power terminal protection shroud

LC1-FDP3304A

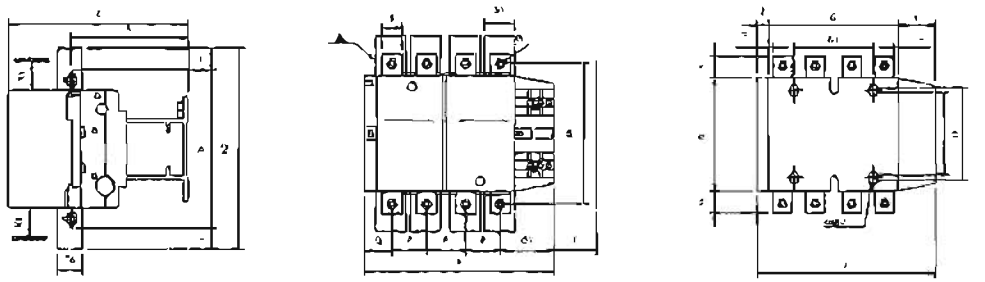

f - minimum distance required for coil removal
▲ Power terminal protection shroud

LC1-	a	b	b1	b2	c	f	G	G1	J	J1	L	M	P	Q	Q1	S	S1	Y	Z	Ø
FDP115A	163.5	162	137	265	172	131	105	80	108	120	107	147	37	29.5	60	15	27	44	13.5	M6
FDP1154A	200.5	162	137	265	172	131	143	80	108	120	107	147	37	29.5	60	15	27	44	13.5	M8
FDP150A	163.5	171	137	301	172	131	105	80	105	120	107	150	40	26.5	57.5	20	34	44	13.5	M8
FDP1504A	200.5	171	137	301	172	131	143	80	105	120	107	150	40	25.5	55.5	20	34	44	13.5	M8
FDP185A	168.5	174	137	305	181	130	111	80	106	120	113.5	154	40	29	59.5	20	34	44	13.5	M8
FDP1854A	208.5	174	137	305	181	130	151	80	106	120	113.5	154	40	28	58.5	20	34	44	13.5	M8
FDP225A	168.5	197	137	364	181	130	111	80	106	120	113.5	172	48	20	51.5	25	44.5	44	13.5	M10
FDP2254A	208.5	197	137	364	181	130	151	80	106	120	113.5	172	48	17	47.5	25	44.5	44	13.5	M10
FDP265A	201.5	208	145	370	214	147	142	98	108	120	141	178	48	39	66.5	25	44.5	38	21.5	M10
FDP2654A	244.5	208	146	370	214	147	190	96	105	120	141	178	48	34	66.5	25	44.5	38	21.5	M10
FDP330A	206	206	146	375	220	147	154.5	96	105	120	147	181	48	43	74	25	44.5	38	20.5	M10
FDP3304A	254	206	146	375	220	147	202.5	96	105	120	147	181	48	43	74	25	44.5	38	20.5	M10

X1(mm) = Minimum electrical clearance according to operating voltage & breaking capacity		
LC1-	200 to 500V	600 to 1000V
FDP115A/1154A	10	15
FDP150A/1504A	10	15
FDP185A/1854A	10	15
FDP225A/2254A	10	15
FDP265A/2654A	10	15
FDP330A/3304A	10	15

Contactors' Dimensions with AC/DC operating coil

LC1-FDP400A/LC1-FDP500A

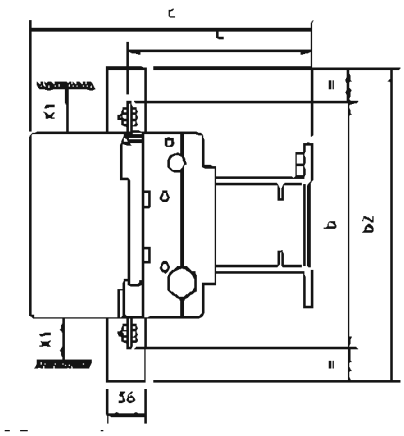

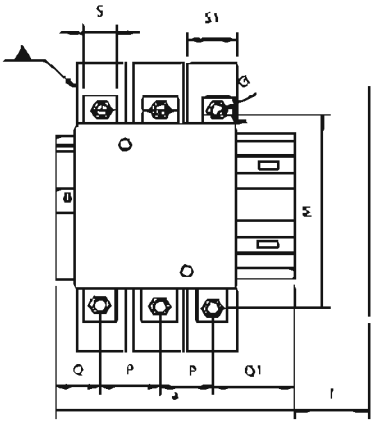

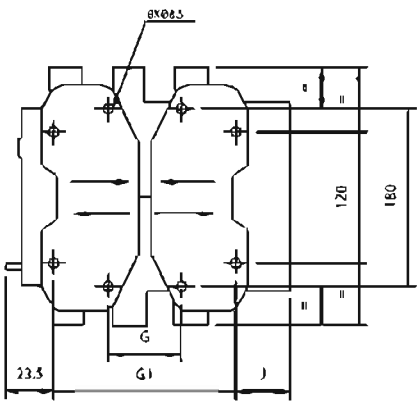

LC1-FDP4004A

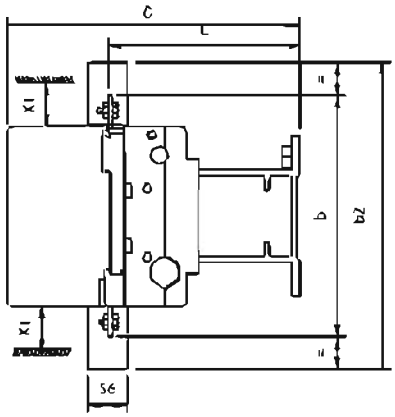

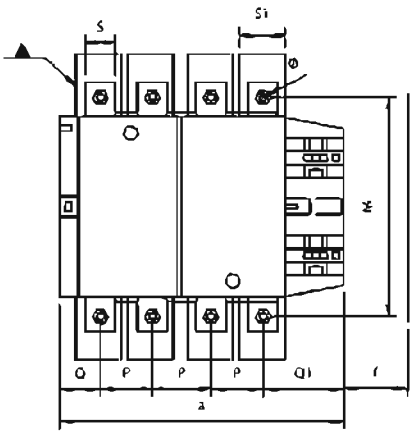

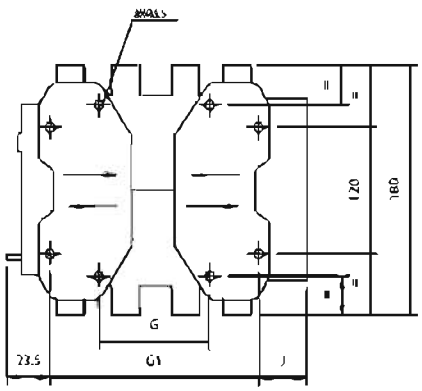

f:- minimum distance required for coil removal

▲ Power terminal protection shroud

LC1-	a	b	b1	b2	c	f	G'	Gmin	Gmax	G1'	G1min	G1max	J	L	M	P	Q	Q1	S	S1
FDP400A	211	206	209	375	220	119	170	86	102	170	156	192	19.5	145	181	48	43	74	25	44.5
FDP4004A	261	206	209	375	220	119	170	86	150	170	156	240	67.5	145	181	48	43	74	25	44.5
FDP500A	231	206	209	400	235	141	170	86	120	170	156	210	39.5	146	205	56	46	77	30	44.5

X1(mm) = Minimum electrical clearance according to operating voltage & breaking capacity		
LC1-	200 to 500V	600 to 1000V
FDP400A	15	20
FDP500A	15	20

Contactors' Dimensions with AC/DC operating coil

LC1-FDP630A

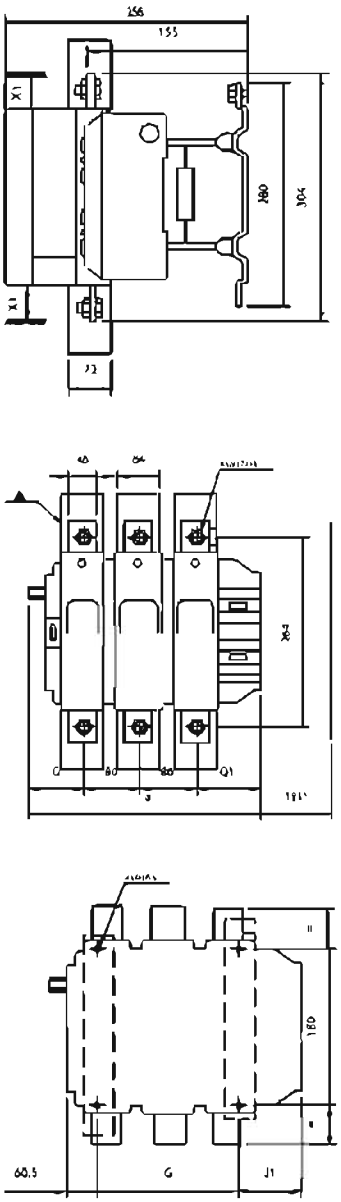

LC1-FDP5004A/LC1-FDP6304A

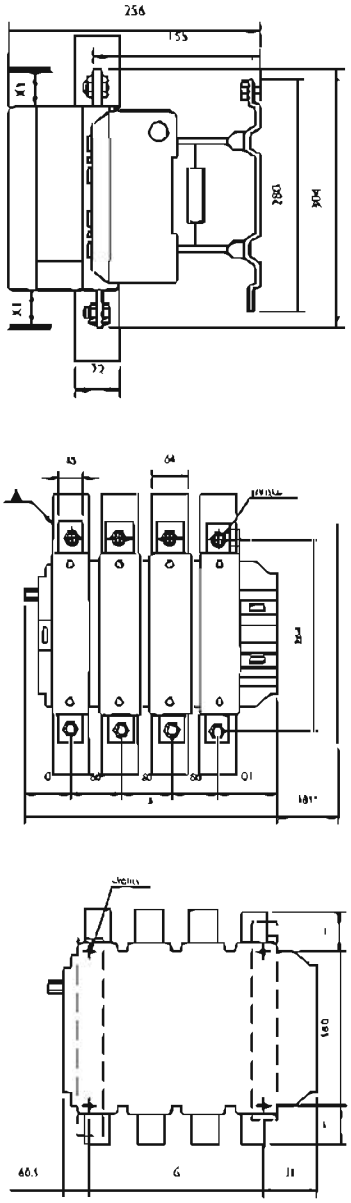

* - minimum distance required for coil removal

▲ Power terminal protection shroud

LC1-	a	b2	G*	Gmin	Gmax	J1	Q	Q1	S	S1
FDP5004A	389	464	240	150	275	68.5	60	89	25	64
FDP630A	306	464	180	100	195	68.5	60	89	25	64
FDP6304A	389	464	240	150	275	68.5	60	89	30	64
FDP800A	306	464	180	100	195	68.5	60	89	25	64
FDP8004A	389	464	240	150	275	68.5	60	89	30	64

X1(mm) = Minimum electrical clearance according to operating voltage & breaking capacity		
LC1-	200 to 500V	800 to 1000V
FDP630A	20	30
FDP5004A	15	20

Synopsis - Contactors

Conforming to IEC-VDE-BS-IS For other standards, please refer to us

Coil Reference (AC)

Contactor	Volts AC	24	48	110	115	120	127	220	230	240	250	260	277	380	400	415	440	500	550	660
F115 F150	50 Hz	✓	✓	-	-	•	-	•	•	✓	✓	-	•	✓	✓	✓	-	•	-	•
F185 F225	60 Hz	-	-	✓	✓	•	•	-	-	✓	-	-	✓	•	-	-	✓	•	-	•
F265 F300	40 400Hz	-	✓	-	-	-	✓	✓	✓	✓	-	-	•	✓	•	✓	•	✓	-	•
F400,F500 F630	40 400Hz	•	✓	✓	•	✓	✓	✓	✓	✓	•	•	•	✓	✓	✓	✓	•	-	•

Coil Reference (DC)

Volt DC	24	48	110	120	125	220	240	250	440
F115 F150 F185	✓	-	-	•	✓	✓	•	✓	✓
F225 F265 F300	✓	-	✓	•	✓	✓	•	✓	✓
F115 F150 F185	✓	✓	-	•	-	-	•	✓	-
F265,F300	-	-	-	•	-	-	•	✓	-
F320	•	-	-	•	-	-	•	✓	-

Code				
AC	LC1-FDP115A+●	LC1-FDP150A+●	LC1-FDP185A+●	LC1-FDP225A+●
DC	LC1-FDP1154A+●	LC1-FDP1504A+●	LC1-FDP1854A+●	LC1-FDP2254A+●

Maximum rated operational voltage	690V	690V	690V	690V
Maximum rated current for motor control (3 phase 440V, 50-60Hz, for AC3 duty)	115A	150A	185A	225A
Maximum standard power rating for motor control for AC3 Duty θ < 55°C, 415V	Kw / hp	Kw / hp	Kw / hp	Kw / hp
	59 / 80	80 / 108	100 / 136	110 / 148
3 phase AC3 — 230V HP	40	50	60	75
3 phase AC3 — 460/480V HP	75	100	125	130
3 phase AC3 — 575/600V HP	100	125	150	150
Mounting position (w.r.t. normal vertical mounting plane)*	± 30°	± 30°	± 30°	± 30°
Maximum thermal current Ith (θ < 40°C)	200A	250A	275A	315A
Maximum operating rate AC (operations / hr)	2400	2400	2400	2400
DC	2400	2400	2400	2400
Average coil consumption (inrush / sealed) 50 Hz	550 / 45 VA	550 / 45 VA	805 / 55 VA	805 / 55 VA
60 Hz	660 / 55 VA	660 / 55 VA	970 / 66 VA	970 / 66 VA
40 -400 Hz				
DC	560 / 4.5W	560 / 4.5W	800 / 5W	800 / 5W
Heat dissipation at AC	12 to 16W	12 to 16W	18 to 24W	18 to 24W
DC	4.5W	4.5W	5W	5W
Mechanical life (in millions of operations) 50 or 60 Hz	10	10	10	10
50 / 60 Hz	-	-	-	-
Power contact terminal capacity mm²	95	120	150	185
Over-all dimensions in mm	80 / 110/120 / 362 / 164	80 / 110/120 / 362 / 164	80 / 110/120 / 174 / 169	80 / 110/120 / 197 / 169
Projection (LC1-F)	165mm	165mm	176mm	176mm

Note: 4P F-Range Contactor (UL) under process.

Coil Reference			
LX1FF	LX1FG	LX1FH-2	LX1FJ
LX4FF	LX4FG	LX4FH-2	LX4FJ
LX1FE	LX1FL	LX1FX	
LX4FE	LX4FL	LX4FX	

- 2 coils in series

DC Coil reference for LC1F300A Contactor

Control Circuit Voltage	Voltage Code	Reference*
110/120	FW	LX4FBFW
220/240	MW	LX4FBMW
380/400	QW	LX4FBQW

* For AC Coils will be supplied with rectifier
add suffix DP(B4) in case of FW (110/120) & MW (220/240)
add suffix DP(B4) in case of QW (380/400)

LC1-FDP265A+	LC1-FDP330A+	LC1-FDP400A+	LC1-FDP500A+	LC1-FDP630A+	LC1-FDP800A+
LC1-FDP2654A+	LC1-FDP3304A+	LC1-FDP4004A+	LC1-FDP5004A+	LC1-FDP6304A+	

If Contactors are required with DUST COVERS, replace ✦ with 'DP' eg. LC1-FDP115A

690V	690V	690V	690V	690V	690V
265A	330A	400A	500A	630A	800A
Kw / hp	Kw / hp	Kw / hp	Kw / hp	Kw / hp	Kw / hp
140 / 190	180 / 240	220 / 300	280 / 380	375 / 500	450 / 610
75	100	125	200	300	-
150	200	250	400	600	
200	250	300	500	800	-
± 30°	± 30°	± 30°	± 30°	± 30°	± 30°
350A	400A	500A	700A	1000A	1000A
2400	2400	2400	2400	1200	1200
2400	2400	2400	2400	1200	1200
1200 / 95 VA	700 / 10 VA	1075 / 15 VA	1100 / 18 VA	1650 / 22 VA	1900 / 15 VA
1445 / 110 VA	700 / 10 VA	1075 / 15 VA	1100 / 18 VA	1650 / 22 VA	1900 / 15 VA
-	700 / 10 VA	1075 / 15 VA	1100 / 18 VA	1650 / 22 VA	1900 / 15 VA
750 / 5W	750 / 5W	1000 / 6W	1100 / 6W	1600 / 9W	1900 / 15W
30 to 40W	12	14W	18W	20W	25W
5W	-	6W	6W	9W	25W
10	10	10	10	5	5
-	10	10	10	5	5
240	240	2 x 150	2 x 240	2 x 60 x 5	2 x 60 x 5

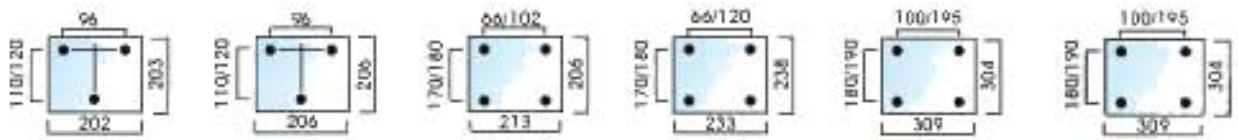

207mm	213mm	181mm	213mm	226mm	226mm

* LC1F /80/ only GE listing

Instantaneous Time Delay Contact Characteristics

Type		UNIT	TA1D	TA2D	TA3D	TA8D
Number of contacts			2 or 4	2	2	2
Rated operational Voltage (Ue)	Upto	V		660		
Rated Insulation Voltage (Ui)	Conforming to IEC 60947-1	V		690		
	Conforming to CSA C22-2 No. 14	V	6 00	-	-	-
Rated Thermal current (Ith)	For ambient temperature <40°C	A		10		
Frequency of operational current		Hz		25....400		
Minimum switching capacity	U min	V		17		
	I min	mA		5		
Short time rating	Permissible for 1s	A		100		
	500ms	A		120		
	100 ms	A		140		
Insulation resistance		MΩ		>10		
Time Delay	Ambient air temperature for operation°C			-40...+70		
(TA2D & TA3D contact blocks)	Repeat accuracy		-	± 5%	± 5%	
Accuracy only valid for setting range	Drift upto 0.5 million operating cycles			+ 15%	+ 15%	
indicated on the front face	Drift depending on ambient air temp.	-		0.25% per°C	0.25% per °C	-
Mechanical Life	In millions of operating cycles		30	5	5	30

TA1-DN22

TA8-DN11

TA1-DN20

TA2-DT2

Standard, instantaneous auxilliary contact blocks

No. of Contacts	Contacts NO	Contacts NC	Snap-On Mounting	Catalog Number
4	2	2	To the front of TC1D09-D95 LC1F115A-800A TP1D09-D80 TP1-DC09/12/25 TCA2DN/TCA3DN	TA1DN22
	1	3		TA1DN13
	4	0		TA1DN40
	0	4		TA1DN04
	3	1		TA1DN31
	1	1		TA1DN11
2	2	0		TA1DN20
	0	2		TA1DN02
1	1	0	To the front of TC1D09-D95 TP1D09-D80 TP1DC09/12/25	TA1DN10
	0	1		TA1DN01
2	1	1	To the side of TC1D09-D95 TP1D09-D80 TP1DC09/12/25 TCA2DN / TCA3DN	TA8DN11
	2	0		TA8DN20

Pneumatic Timer Block (Front Mounted)

Description	Contacts NO	Contacts NC	Range	Catalog Number
ON Delay	1	1	0.1 ... 3s	TA2-DT0
ON Delay	1	1	0.1 ... 30s	TA2-DT2
ON Delay	1	1	10 ... 180s	TA2-DT4
OFF Delay	1	1	0.1 ... 3s	TA3-DR0
OFF Delay	1	1	0.1 ... 30s	TA3-DR2
OFF Delay	1	1	10 ... 180s	TA3-DR4
On Delay	1	1	1 ... 30s*	TA2-DS2

* With switching time of 40msec + 15 msec between the opening of NC contact to the closing of NO contact (for Star Delta application)

TCET030SD

LA9-F701

Electronic Timer

Description	Contacts		Range	Catalog Number
	NO	NC		
Star Delta Timer	1	1	0 ... 30s	TCET030SD415VAC

Protective Shroud Covers for 115A ~ 800A Contactors

For 3P Contactor Type	Catalogue Number		
LC1-F115A	LA9-F701	LC1-F115 4A	LA9-F706
LC1-F150A LC1-F185A	LA9-F702	LC1-F150 4A LC1-F185 4A	LA9-F707
LC1-F225A LC1-F265A LC1-F330A LC1-F400A LC1-F500A	LA9-F703	LC1-F225 4A LC1-F265 4A LC1-F330 4A LC1-F400 4A LC1-F500 4A	LA9-F708
LC1-F630A LC1-F800A	LA9-F704	LC1-F630 4A LC1-F800 4A	LA9-F709

Coil Suppressor

Description	Voltage Ratings	Catalog Number
Wire mounting 250VAC/400VDC max	LC1F115-330	LA9F980(BR)
	LC1F400-780	LA9DO9980(BR)

Power Connectors Wire Sets for Reversing Contactors

Catalog Number	With two identical contactors
LC1-FDP115A	LA9-FF976
LC1-FDP150A	LA9-F15076
LC1-FDP185A	LA9-FG976
LC1-FDP225A	LA9-F22576
LC1-FDP265A	LA9-FH976
LC1-FDP330A	LA9-FJ976
LC1-FDP400A	LA9-FJ976
LC1-FDP500A	LA9-FK976
LC1-FDP630A	LA9-FL976
LC1-FDP800A	LA9-F80076

Set of Power Connections - 3 Pole Changeover Contactor Pair - On Request

Contactor Type	With two identical contactors
LC1-F115A	LA9-F11582
LC1-F150A	LA9-F15082
LC1-F185A	LA9-F18582
LC1-F225A	LA9-F22582
LC1-F265A	LA9-F26582
LC1-F330A	LA9-F33082
LC1-F400A	LA9-F40082
LC1-F500A	LA9-F50082
LC1-F630A	LA9-F60082

3 Pole Mechanically Interlocked 115A ~ 800A Contactors - On Request

Contactor Type	Catalog Number
LC1-F115A	LC2-F115A
LC1-F150A	LC2-F150A
LC1-F185A	LC2-F185A
LC1-F225A	LC2-F225A
LC1-F265A	LC2-F265A
LC1-F330A	LC2-F330A
LC1-F400A	LC2-F400A
LC1-F500A	LC2-F500A
LC1-F630A	LC2-F630A

1 "-" Reversers assembled using two contactors of identical rating type etc.

2 Replace "*" with available coils BD for 24V DC, ED for 48V DC and EED for 54V DC

Overload Relays
Characteristics

Environment

Conforming to standards			IEC 60947-1, IEC 60947-4-1, NFCEN 60947-4-1, VDE 0660, BSEN 60947
Approvals			UL, CSA, IEC
Degree of protection	Conforming to VDE 0106		Protection against direct finger contact IP 2X
Protective treatment	Conforming to IEC 68		"TH"
Ambient air temperature (around the device)	Storage	°C	-60 to +70
	Operation, without derating	°C	-25 to +60
	Max. & Min. operating temp.	°C	-40 to +70
Shock resistance	Premissible acceleration		15gn - 11ms, comforming to IEC 68-2-7
Vibration resistance	Permissible acceleration		6gn, conforming to IEC 68-2-6
Dielectric strength at 50 Hz	Conforming to IEC 255-5	kV	6
Impulse withstand voltage	Conforming to IEC 801-5	kV	6

Electrical Characteristics of Power Circuit

TYPE	TR2-D	UNIT	09301-12316	18321	25322-65361	80369-95365
Tripping class			10	10	10	10
Rated insulation Voltage (Ui)	Conforming to IEC 60947-4-1	V	TR2-D09301~D32355:690V		TR2D40355~D95365:1000V	
Rated operating voltage upto	Conforming to UL, CSA	V	600	600	600	600
Rated impulse withstand voltage (Uimp)		kV	6	6	6	6
Frequency limits	Of the operational current	Hz	0... 400	0...400	0...400	0...400
Setting range	Depending on model	A	0.1...13	16...18	17...70	63...193
Connecting to screw clamp terminal			Minimum / Maximum CSA			
Flexible cable without cable end	1 conductor	mm²	1.5 / 10	1.5 / 10	4 / 35	4 / 50
Flexible cable with cable end	1 conductor	mm²	1 / 4	1 / 6	4 / 35	4 / 50
Solid cable without cable end	1 conductor	mm²	1 / 6	1.5 / 4	4 / 35	4 / 50
Tightening torque		Nm	1.7	2.5	9	9
Connection to spring terminals			Mimimum / Maximum CSA			
Flexible cable without cable end	1 conductor	mm²	1.5 / 4	1.5 / 4	-	-
SolidCable without cable end	1 conductor	mm²	1.5 / 4	1.5 / 4	-	-

Operating Characteristics

TYPE	TR2-D	UNIT	09301-12316	18321	25322-65361	80369-95365
Temperature Compensation		°C	-20...+60	-30...+60	-30...+60	-20...+60
Tripping Threshold	Conforming to IEC 6047-4-1	A	1.14 + 0.06In			
Sensitivity to phase failure	Conforming to IEC 60947-4-1		Tripping current 25% above In			

Auxiliary Contact Characteristics

Conventional thermal Curent		A	5					
Maximum consumption of operating	AC Supply	V	24	48	110	220	380	600
coil of controlled contactors (Occassional		VA	100	200	400	600	600	600
operating cycles of contact 95 - 96)		V	24	48	110	220	440	-
		W	100	100	50	45	25	-
Short circuit protection	By gG or BS fuse Max. rating or by GB2 circuit-breaker	A	5					
Connection to screw clamp terminal			Minimum / Maximum CSA					
Flexible cable without cable end	1 or 2 conductors	mm²	1 / 2.5					
Flexible cable withcable end	1 or 2 conductors	mm²	1 / 2.5					
Solid cable without cable end	1 or 2 conductors	mm²	1 / 2.5					
Tightening torque	1 or 2 conductors	Nm	1.85					
Connecting to spring terminal			Minimum / Maximum CSA					
Flexible cable without cable end	1 or 2 conductors	mm²	1 / 2.5					
Solid cable without cable end	1 or 2 conductors	mm²	1 / 2.5					

Overload Relays - Specifications

Overload Relay (Class 10), Base Plate for Independent Mounting

RELAY REFERENCE	RELAY SETTING RANGE (A)	STANDARD POWER RATINGS OF 3-PHASE MOTORS 50/60 Hz AC CATEGORY					BACK UP FUSE RATING		BASE PLATE* REFERENCE
		220V KW	380V KW	415V KW	440V KW	660V KW	aM(A)	g1 (A)	
TR2-D09301	0.1 to 0.16	-	-	-	-	-	0.25	2	
TR2-D09302	0.16 to 0.25	-	-	-	-	-	0.5	2	
TR2-D09303	0.25 to 0.4	-	-	-	-	-	1	2	
TR2-D09304	0.4 to 0.63	-	-	-	-	0.37	1	2	
TR2-D09305	0.63 to 1	-	-	-	-	0.55	2	4	
TR2-D09306	1 to 1.6	-	0.37	-	0.55	1.1	2	4	
TR2-D093X6	1.25 to 2	-	0.55	0.75	0.75	1.3	4	6	TA7D0964
TR2-D09307	1.6 to 2.5	0.37	0.75	1.1	1.1	1.5	4	6	
TR2-D09308	2.5 to 4	0.75	1.5	1.5	1.5	3	6	10	
TR2-D09310	4 to 6	1.1	2.2	2.2	2.2	4	8	16	
TR2-D09312	5.5 to 8	1.5	3	3.7	3.7	5.5	12	20	
TR2-D09314	7 to 10	2.2	4	4	4	7.5	12	20	
TR2-D12316	9 to 13	3	5.5	5.5	5.5	10	16	25	
TR2-D18321	12 to 18	4	7.5	9	9	15	20	35	
TR2-D25322	17 to 25	5.5	11	11	11	18.5	25	50	
TR2-D32353	23 to 32	7.5	15	15	15	-	40	63	TA7D3264
TR2-D32355	28 to 36	9	15	18.5	18.5	-	40	80	
TR2-D40355	30 to 40	10	18.5	22	22	30	40	100	
TR2-D65357	37 to 50	11	22	25	25	37	63	100	
TR2-D65359	48 to 65	18.5	25	30	30	50	63	100	TA7D4064*
TR2-D65361	55 to 70	20	30	37	37	55	80	125	
TR2-D80363	63 to 80	22	33	40	40	59	80	125	
TR2-D95365	80 to 93	25	45	49	50	80	100	160	
LR1-F105	65 to 105	25	51	55	59	90	0.25	160	
LR1-F125	80 to 125	30	59	59	63	110	125	200	
LR1-F160	100 to 160	45	80	80	90	140	160	250	
LR1-F200	125 to 200	55	90	100	110	160	200	315	
LR1-F250	160 to 250	63	110	129	140	200	250	400	
LR1-F315	200 to 315	80	150	160	160	257	315	500	
LR1-F400	250 to 400	110	185	200	220	335	400	630	
LR1-F500	315 to 500	140	250	257	280	445	500	800	
LR1-F630	400 to 630	180	315	355	375	500	630	800	
*LR1-F800	500 to 800	220	400	425	450	—	-	1000	
*LR1-F1000	630 to 1000	295	500	500	500	—	-	1250	

TR2-D25322

LR1-F105

Notes : 1. Protected shrouds for main poles or power poles to be ordered seperately for LR1 Relays

2. Standard Fault Ratings (UL) (CSA) with TR2 Relay.

*Under UL/CSA approval

Reset Extended Push Button

Description	Reference
Reset Extended Push Button (Round Type)	RCB2AL8R
Reset Extended Push Button (Hex Type)	RCB2AL8H

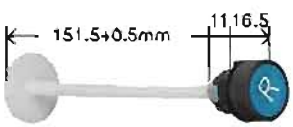

RCB2AL8R

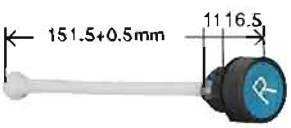

RCB2AL8H

Overload Relays

Dimensions, Tripping Curves

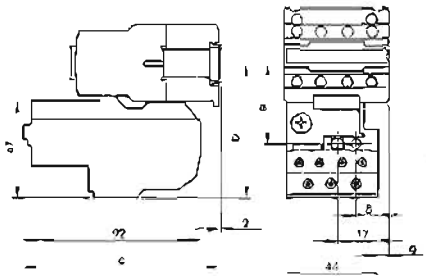

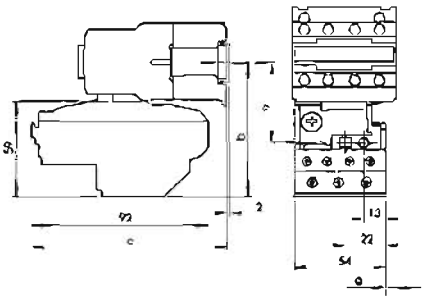

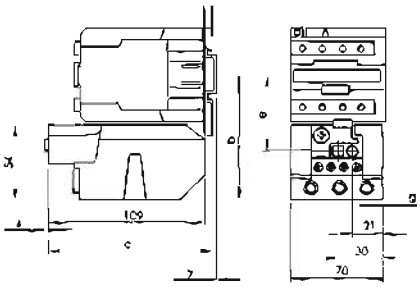

TR2D09301-D25322				
Mounting With	b	c	e	g
TC1D09, D12, D18 TP1DC09, DC12	81	98	50	0
TC1D25 / TP1DC25	86	108	55	10.7
TC1D32	86	108	55	8.1
TP1D09, D12, D18	81	133	50	0
TP1D25	86	152	55	10.7
TP1D32	86	153	55	8.1

TR2D32353-32355				
Mounting With	b	c	e	g
TC1D25/TP1DC25	97.5	98	60	1.5
TC1D32	97.5	98	60	0.5
TP1D25	97.5	155	60	1.5
TP1D32	97.5	155	60	0.5

TR2D40355-D95365				
Mounting With	b	c	e	g
TC1D40	111	119	72.4	4.5
TC1D50	111	119	72.4	4.5
TC1D65	111	119	72.4	4.5
TC1D80	115.5	123.4	76.9	9.5
TC1D95	115.5	123.4	76.9	9.5
TP1D40	111	176	72.4	4.5
TP1D50	111	176	72.4	4.5
TP1D65	111	176	72.4	4.5
TP1D80	115.5	179.4	76.9	9.5

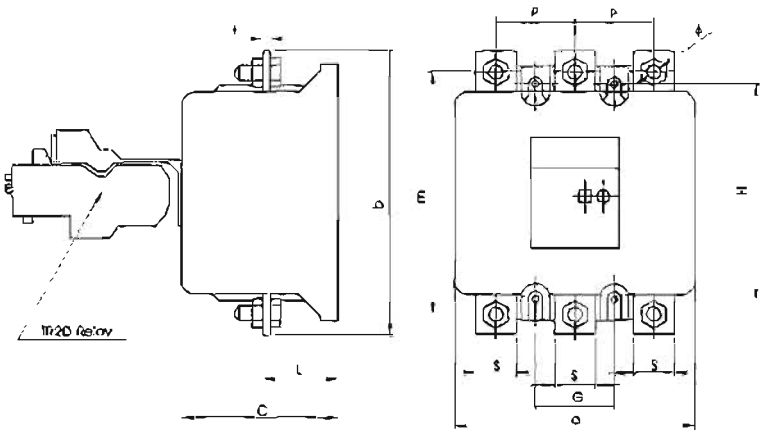

LR1-F	a	b	C	G	H	L	M	P	S	e	I
1 0 5	126	160	81	40	110 120	56	140	40	20	9	3
1 2 5	126	160	81	40	110 120	56	140	40	20	9	3
1 8 0	126	160	81	40	110 120	56	140	140	20	9	3
2 0 0	126	160	81	40	110 120	56	140	140	20	9	3
2 5 0	171	182	120	49	140	44.5	157	46	25	11	4
3 1 5	171	182	120	49	140	44.5	157	46	25	11	4
4 0 0	171	182	120	49	140	44.5	157	46	25	11	4
5 0 0	171	194	120	49	140	45.5	164	55	25	11	5
6 3 0	171	194	120	49	140	45.5	184	55	30	11	5

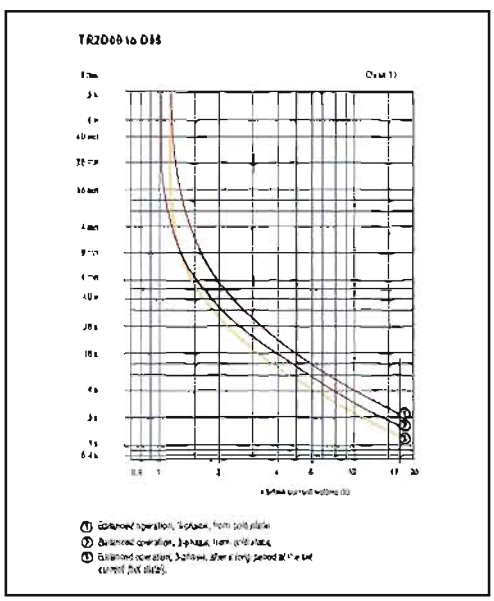

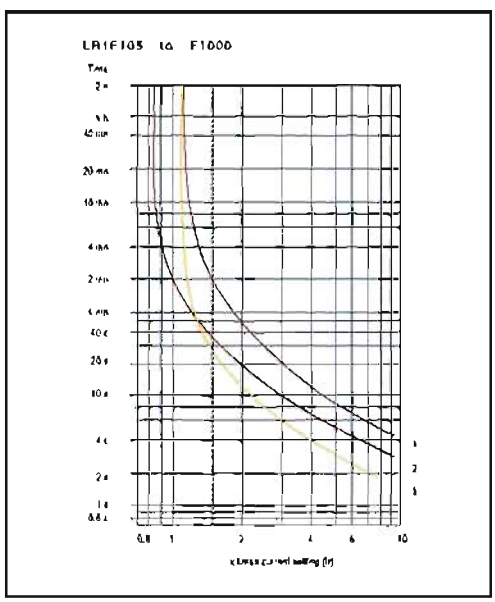

SHAMROCK CONTROLS

Your business is our Number One priority.

Local Distributor:

SHAMROCK CONTROLS

13735 Beta Road
Dallas, Texas 75244
Tel. No. (972)233-6712
Fax No. (972)233-8039
www.shamrockcontrols.com